CIRRUS LOGIC®

Leading the Digital Entertainment Revolution™

CS42416/26/18/28

PRODUCT BULLETIN

New 6 & 8 Channel Surround Sound CODECs Deliver 192 kHz Advanced Performance at Competitive Price Point

CS42416/26/18/28 Features

	CS42416/26	CS42418/28
ADCs	2	2
Dynamic Range	114 dB	114 dB
THD+N	-100 dB	-100 dB
DACs	6	8
Dynamic Range	110/114 dB	110/114 dB
THD+N	-100 dB	-100 dB

- Two 24-bit 192 kHz ADCs
- Six or eight 24-bit 192 kHz DACs
- -100 dB THD+N
- Integrated low-jitter PLL
- PLL clock or system clock selection
- ADC high pass filter for DC offset calibration
- Digital output volume control with soft ramp
- Seven General Purpose Outputs (GPO)
- Digital +/- 15 dB input gain adjust for ADC
- Differential analog architecture
- Supports logic levels between 1.8 V and 5 V
- Available in a 64-pin LQFP
- CS42416 price: $2.98 (10 K)
- CS42418 price: $3.70 (10 K)
- CS42426 price: $4.34 (10 K)
- CS42428 price: $6.02 (10 K)

Actual Size

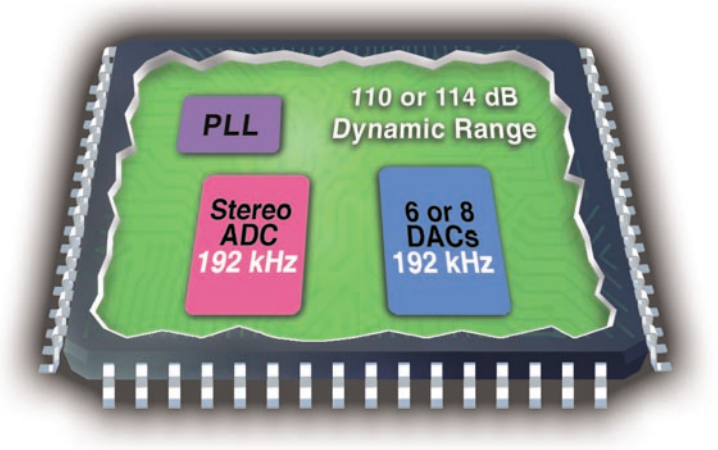

The CS42416/26/18/28 are 24-bit CODECs that are designed for use in six or eight channel surround sound audio systems. The product family supports sample rates of up to 192 kHz, making them an ideal choice for AVRs, DVD receivers, digital mixing consoles and automotive audio systems.

The CS42416/18 CODECs feature 110 dB dynamic range and the advanced design of the CS42426/28 delivers an even more impressive 114 dB dynamic range. Because all four chips share a common footprint, designers can quickly and easily interchange their designs to enable varied end-product performance, reduce development costs, and accelerate time to market.

These CODECS integrate two ADCs and six or eight DACs. All devices also have an integrated PLL that provides a low-jitter system clock. You can also take advantage of a variety of one-line data modes (OLMs) by adding two external ADCs. All these features enable manufacturers to bring advanced features such as DVD-Audio into more affordable consumer systems.

The CS42416/26/18/28 family delivers design flexibility, advanced performance, and a competitive price-point, providing exactly what you need to get your next product to market fast!

Cirrus Logic, Inc. 2901 Via Fortuna Austin, TX 78746 USA
T (512) 851-4000 T (800) 888-5016 F (512) 851-4977

For more information, visit us at www.cirrus.com

© 2003, Cirrus Logic, Inc. All rights reserved. Cirrus, Cirrus Logic, and Leading the Digital Entertainment Revolution are trademarks of Cirrus Logic, Inc. Other brand and product names may be trademarks or service marks of their respective owners.

0095-0403-PB