Portfolio 03
Application Diagrams 04
Audio Components 18

2012 Audio Solutions

Product Selection Guide

CIRRUS LOGIC®

1

Cirrus Logic Audio Solutions

A Comprehensive Portfolio of Audio Products.

Cirrus Logic is a recognized leader in analog and mixed-signal audio converter ICs and audio processors that enable today's new consumer, professional and automotive entertainment products. Our products include analog-to-digital converters ("ADCs"), digital-to-analog converters ("DACs"), codecs that integrate ADCs and DACs into a single IC, digital interface ICs (eg. "S/PDIF" receivers), Class D digital amplifier controllers and power stages and audio DSPs.

Our products are featured in a wide array of consumer applications, including smartphones, tablets, portable media players, soundbars, complete home theater systems, set-top boxes, gaming devices, sound cards and digital TVs. Applications for products within professional markets include digital mixing consoles, multitrack digital recorders and effects processors, and applications for products within automotive markets include amplifiers, satellite radio systems and multispeaker car audio systems.

CIRRUS LOGIC®

Application Diagrams

Automotive Audio

- Automotive Audio Distribution Amplifier
- Telematics System

Consumer Audio

- Blu-ray Disc Receiver
- Docking Station / Desktop Media Speaker System
- Digital Television
- Digital Set-Top Box
- HD A/V Receiver
- Soundbar, Entry-Level
- Soundbar, Mid-Level
- Sound Projector, Entry-Level
- Media Connected Sound Projector, Mid/High-End
- Media Connected Soundbar, High-End

Portable Audio

- Camcorder
- MP3 Player
- Portable Media Player
- Portable Navigation Device (PND)
- Smartphone
- Tablet PC
- Ultrabook (HD Audio)
- Ultrabook (I^2s Audio)

Professional Audio

- Audio Interface
- Mixing Console

Automotive Audio Distribution Amplifier

Automotive Audio

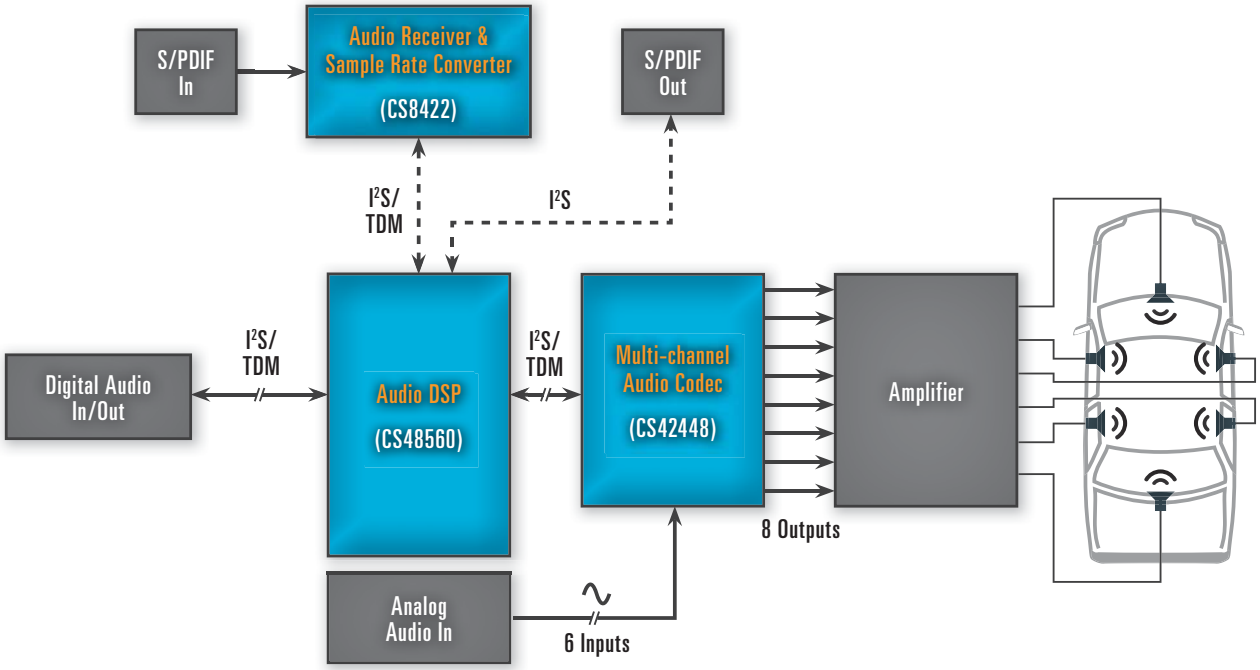

Telematics System

Automotive Audio

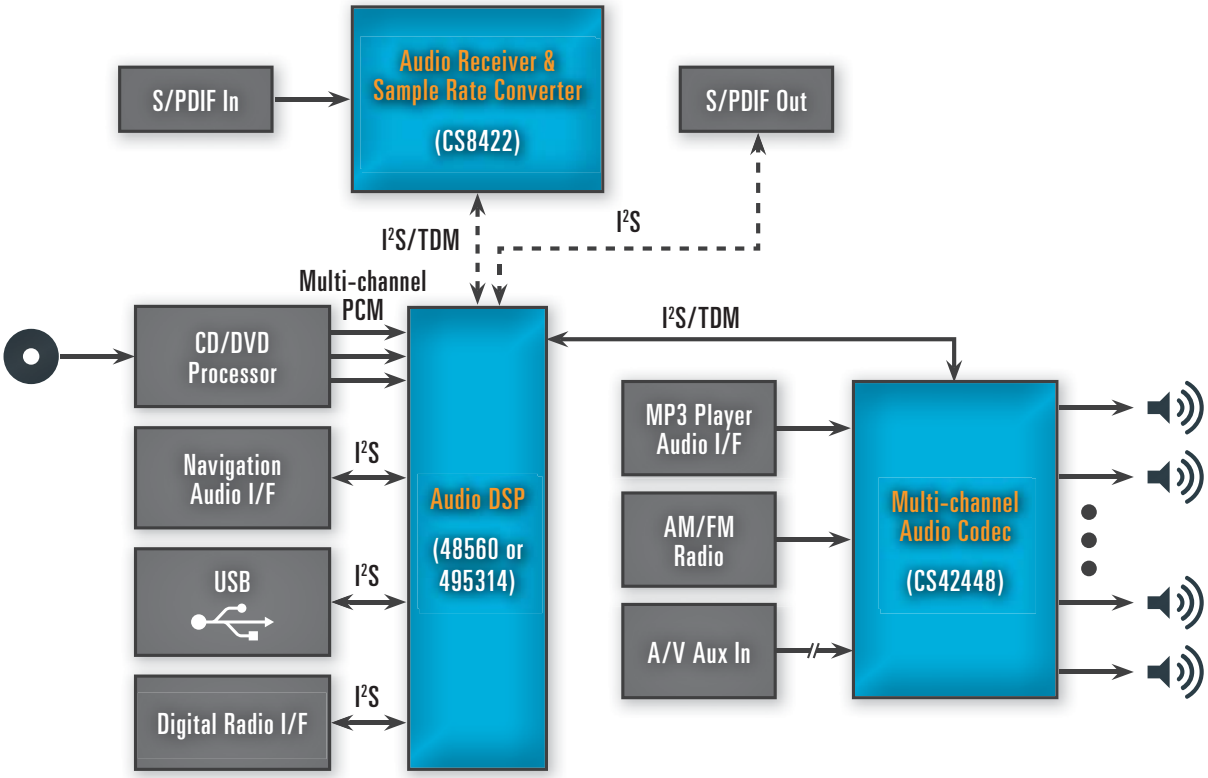

Blu-ray Disc Receiver

Consumer Audio

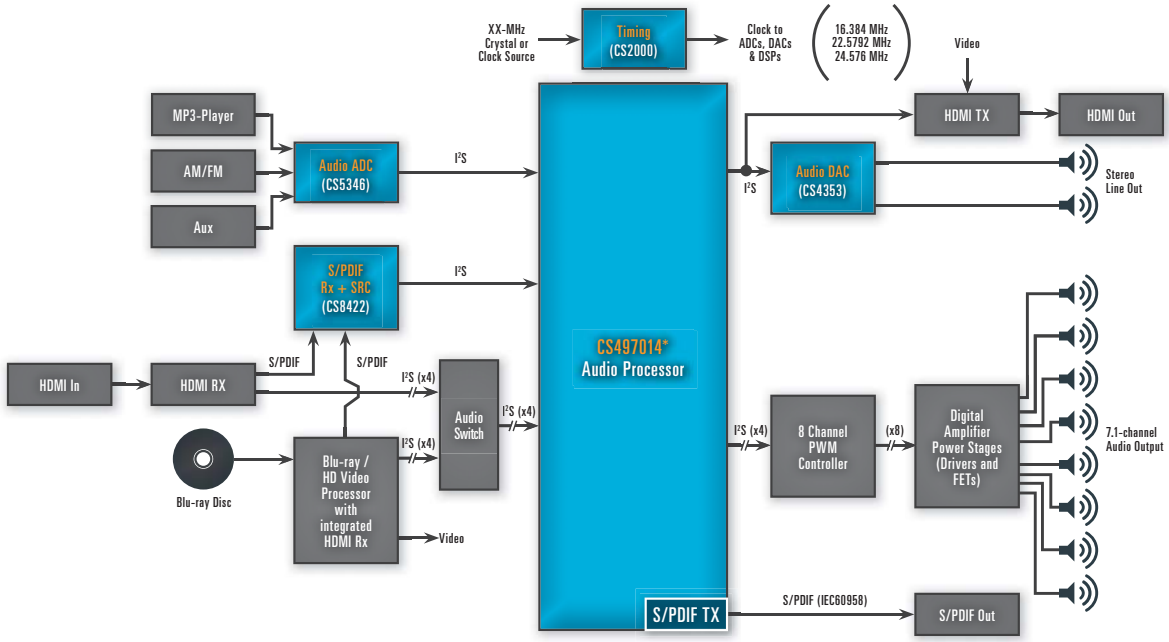

* Use CS495314 for advance post-processing or Legacy Audio decoding (AC-3, DTS, AAC) if HD Audio Decoding capability is not required

Docking Station / Desktop Media Speaker System

Consumer Audio

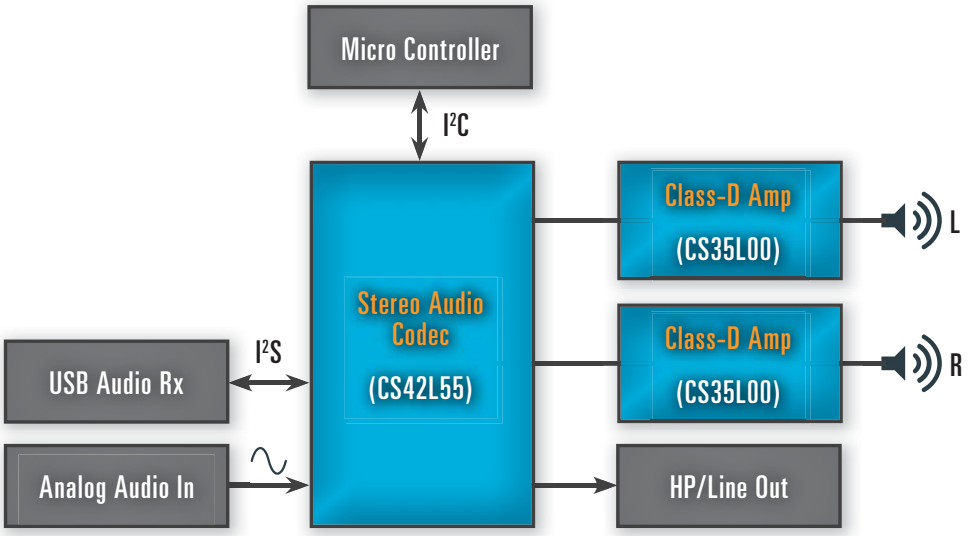

Digital Television

Consumer Audio

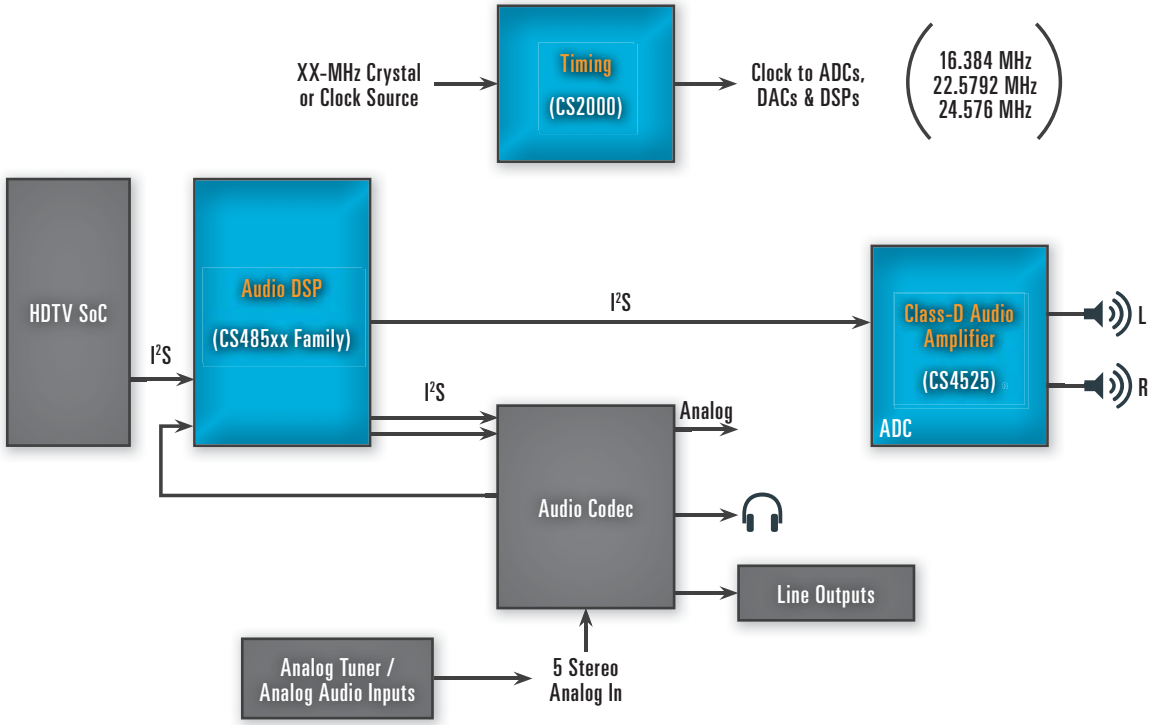

Digital Set-Top Box

Consumer Audio

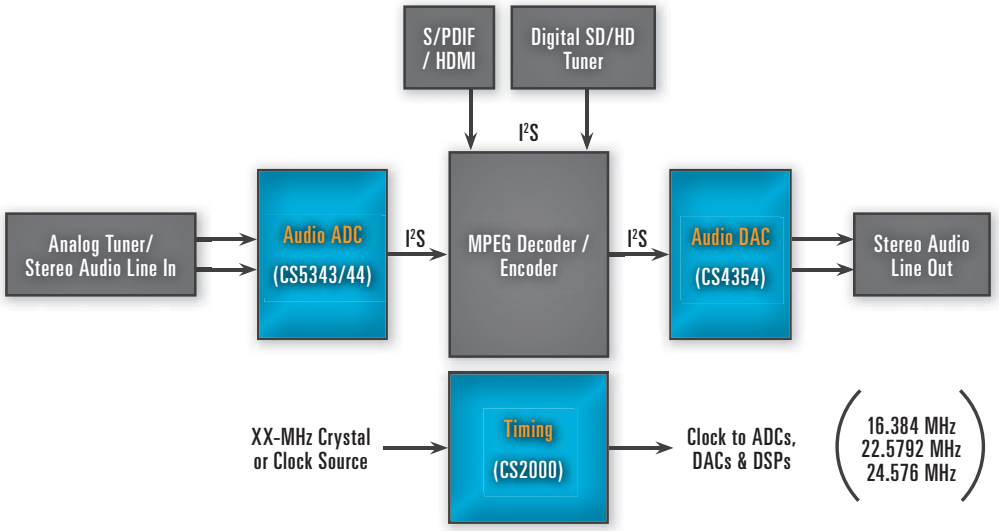

HD A/V Receiver

Consumer Audio

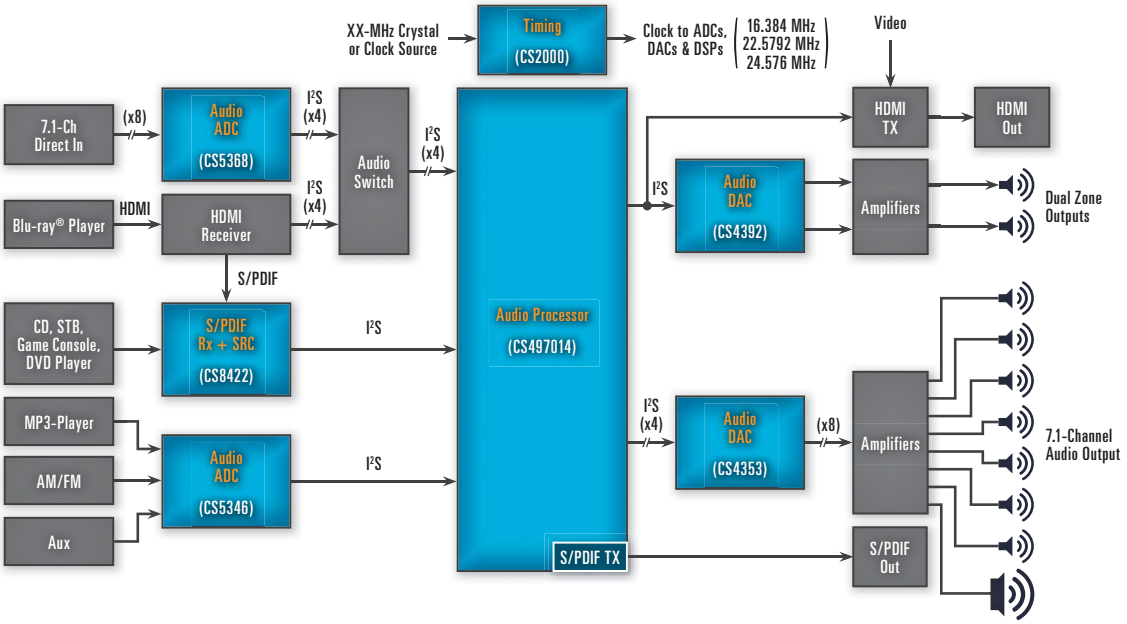

Soundbar, Entry-Level (15W x 2)

Consumer Audio

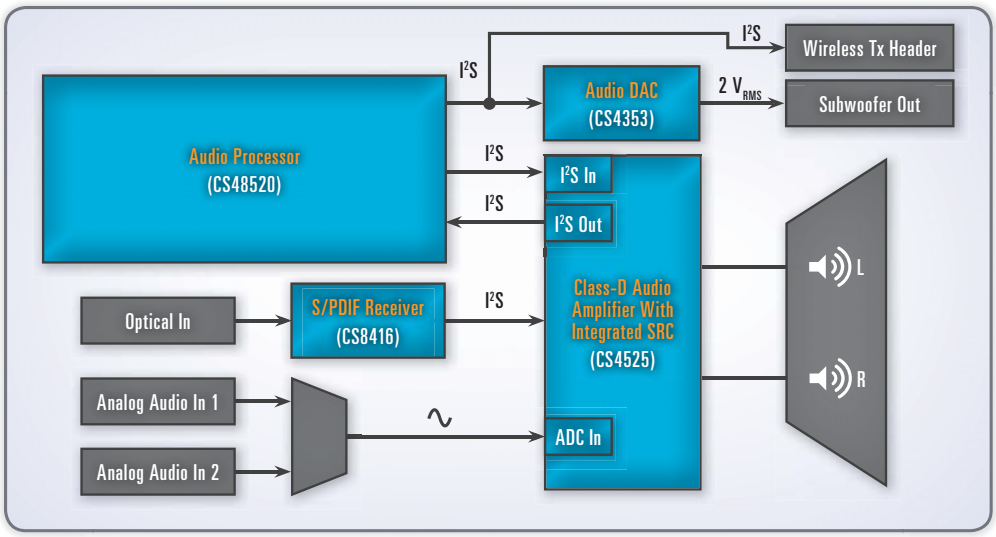

*Note: Please contact your sales representative or FAE for the reference design files associated with this block diagram (CRD-SB15Wx2).

FEATURES

- SRS CircleSurround with SRS TruDialog + SRS TruSurround HD / SRS Headphone 360 (enabling SRS CircleSurround Headphone) + SRS TruVolume
- Cirrus Dynamic Volume Leveler + Cirrus Virtualizer Technology + Cirrus Bass Enhancement + Cirrus BandXpandeR
- Audistry (by Dolby) + Dolby Pro Logic IIx + Dolby Virtual Speaker/Dolby Headphone
- Dolby Volume + Audistry (by Dolby)
- Audyssey EQ + Audyssey Dynamic Volume/EQ + ABX/Bass XT
- Tone Control
- Parametric EQ (Can be used for SRS EQ in SRS StudioSound HD signal flow)
- Bass Management
- Delay
- Volume Control Compressor/Limiter
- Custom Audio Processing
- and more...

Soundbar, Mid-Level (30W x 2)

Consumer Audio

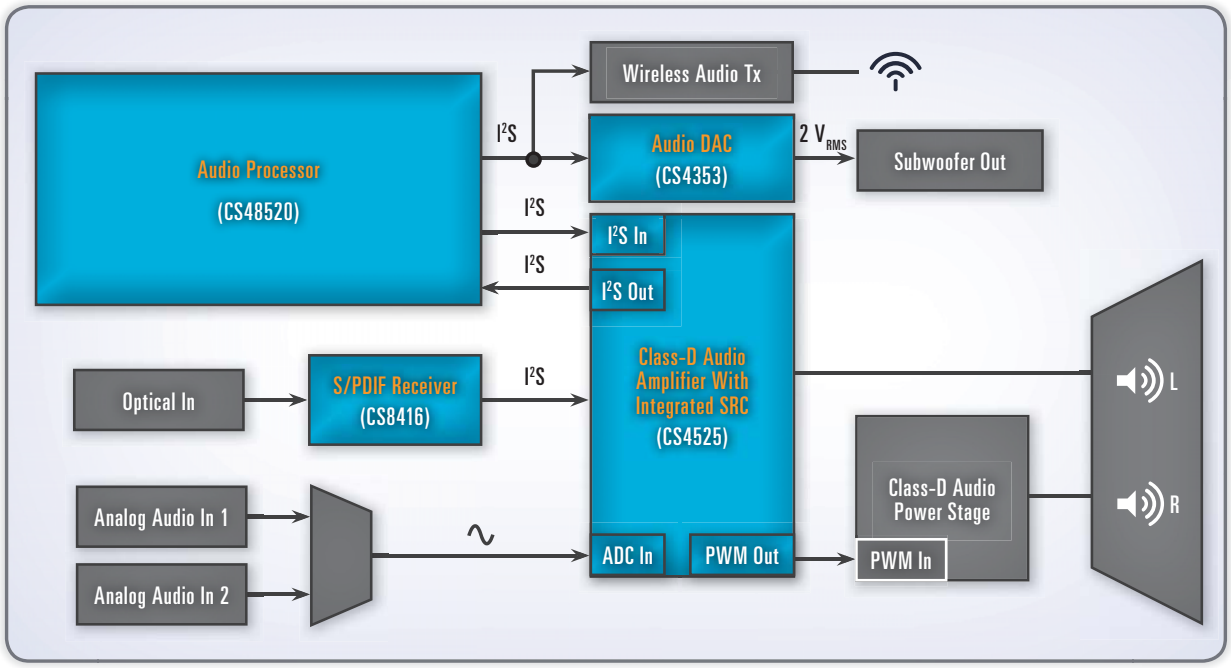

*Note: The reference design files associated with this block diagram are available for download from www.cirrus.com/sb

FEATURES

- SRS CircleSurround with SRS TruDialog + SRS TruSurround HD / SRS Headphone 360 (enabling SRS CircleSurround Headphone) + SRS TruVolume
- Cirrus Dynamic Volume Leveler + Cirrus Virtualizer Technology + Cirrus Bass Enhancement + Cirrus BandXpandeR
- Audistry (by Dolby) + Dolby Pro Logic IIx
- Dolby Virtual Speaker/Dolby Headphone
- Dolby Volume + Audistry (by Dolby)
- Audyssey EQ + Audyssey Dynamic Volume/ EQ + ABX/Bass XT
- Tone Control
- Parametric EQ (Can be used for SRS EQ in SRS StudioSound HD signal flow)
- Bass Management
- Delay
- Volume Control Compressor/Limiter
- Custom Audio Processing
- and more...

Sound Projector, Entry-Level (10W x 8)

Consumer Audio

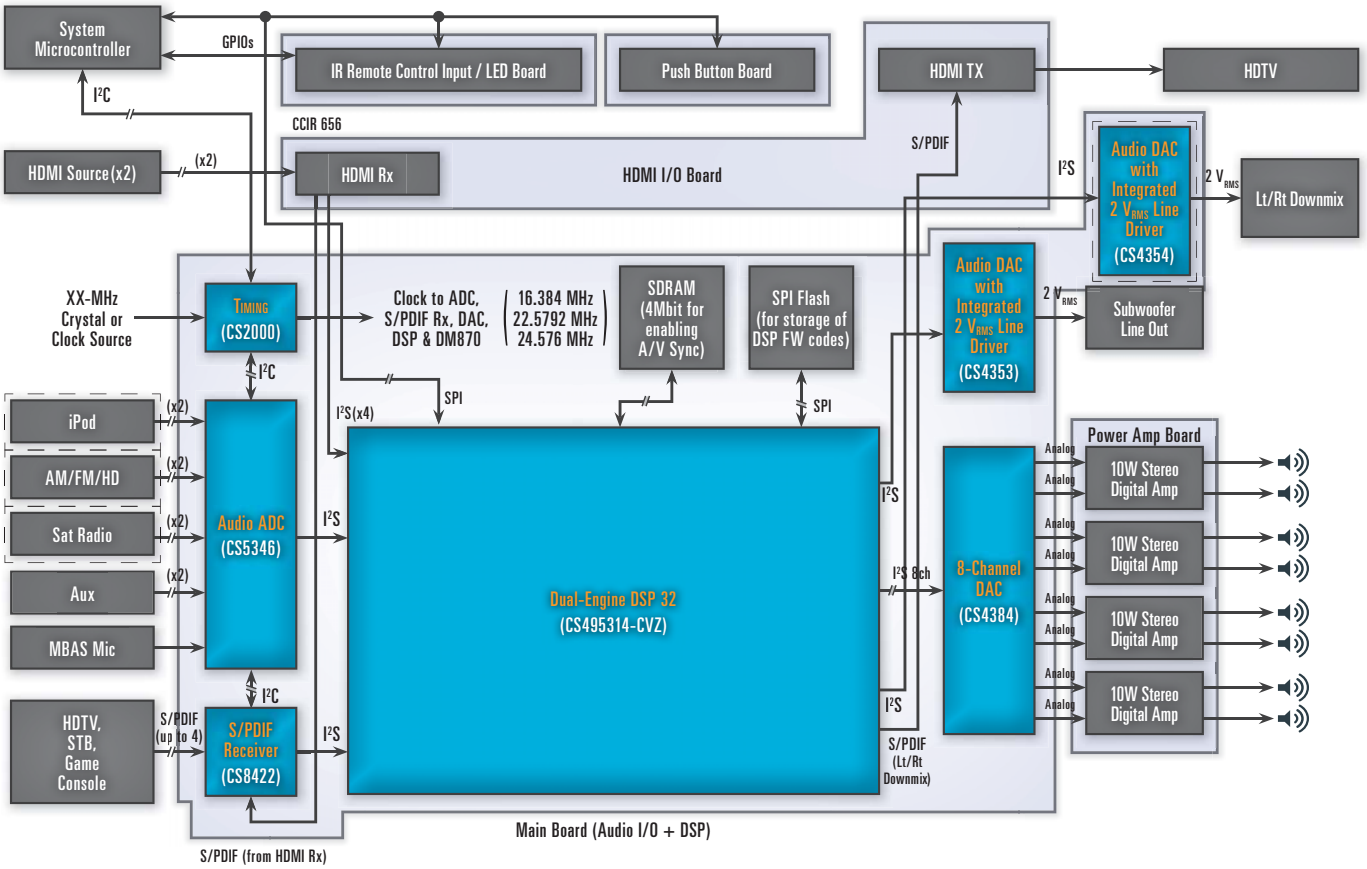

FEATURES

- Dolby Digital
- Dolby Digital EX
- DTS Digital Surround
- DTS 96/24
- DTS-ES Extended Surround
- MPEG-2 AAC LC
- Linear PCM
- WMA Stereo
- MP3
- MP3 Surround
- MPEG-4 HE-AAC
- Cirrus Original Multichannel Surround 2 PCM Processor for Environment Creation
- Dolby Pro Logic II/IIx
- DTS Neo:6 / DTS Neural Surround
- DTS Surround Sensation Speaker
- SRS TruVolume
- Dolby Volume
- Audyssey Dynamic Volume / Dynamic EQ
- Cirrus Virtualizer Technology
- Cirrus Band XpandeR
- Tone Control, Re-EQ, Parametric EQ SRS EQ
- Compressor/ Hard Limter, Bass Management
- Ind. Channel Delay & Trim Level Control
- Volume Control
- 1 Ltd. Beam Steering Cirrus Virtualizer Technology
- DiMagic
- Dolby Virtual Speaker
- DTS Surround Sensation Speaker
- EmbracingSound
- EmbracingSound Theatre/HD
- SRS TruSurround HD/HD4

Media Connected Sound Projector, Mid/High-End (10W x 8/16)

Consumer Audio

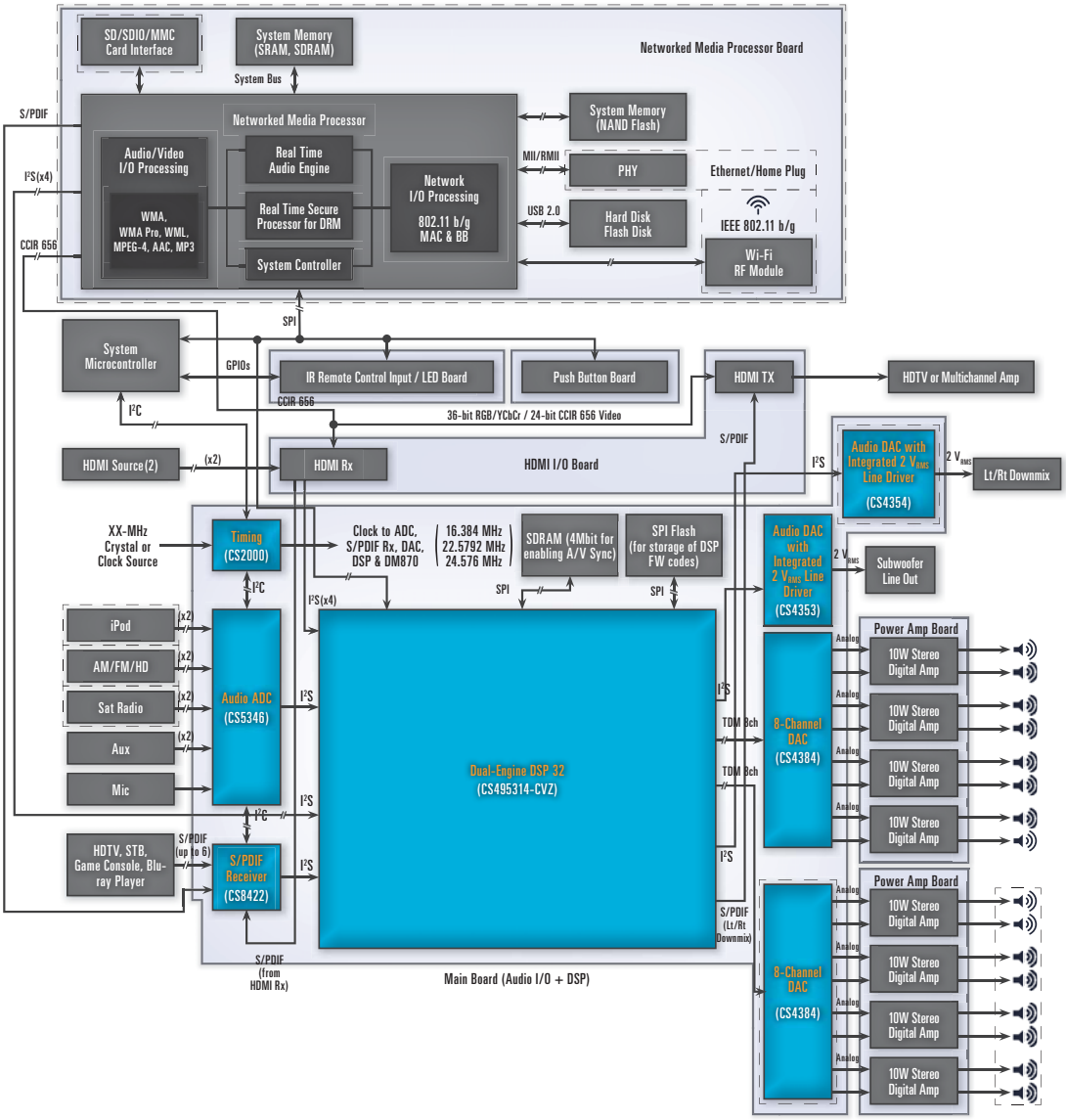

FEATURES

- Dolby Digital
- Dolby Digital EX
- DTS Digital Surround
- DTS 96/24
- DTS-ES Extended Surround
- MPEG-2 AAC LC
- Linear PCM
- WMA Stereo
- MP3
- MP3 Surround
- MPEG-4 HE-AAC
- Cirrus Original Multichannel Surround 2 PCM Processor for Environment Creation
- Dolby Pro Logic II/IIx
- DTS Neo:6 / DTS Neural Surround
- DTS Surround Sensation Speaker
- SRS TruVolume
- Dolby Volume
- Audyssey Dynamic Volume / Dynamic EQ
- Cirrus Virtualizer Technology
- Cirrus Band XpandeR
- Tone Control, Re-EQ, Parametric EQ SRS EQ
- Compressor/ Hard Limter, Bass Management
- Ind. Channel Delay & Trim Level Control
- Volume Control
- 1 Ltd. Beam Steering Cirrus Virtualizer Technology
- DiMagic
- Dolby Virtual Speaker
- DTS Surround Sensation Speaker
- EmbracingSound
- EmbracingSound Theatre/HD
- SRS TruSurround HD/HD4

Media Connected Soundbar, High-End (30W x 5)

Consumer Audio

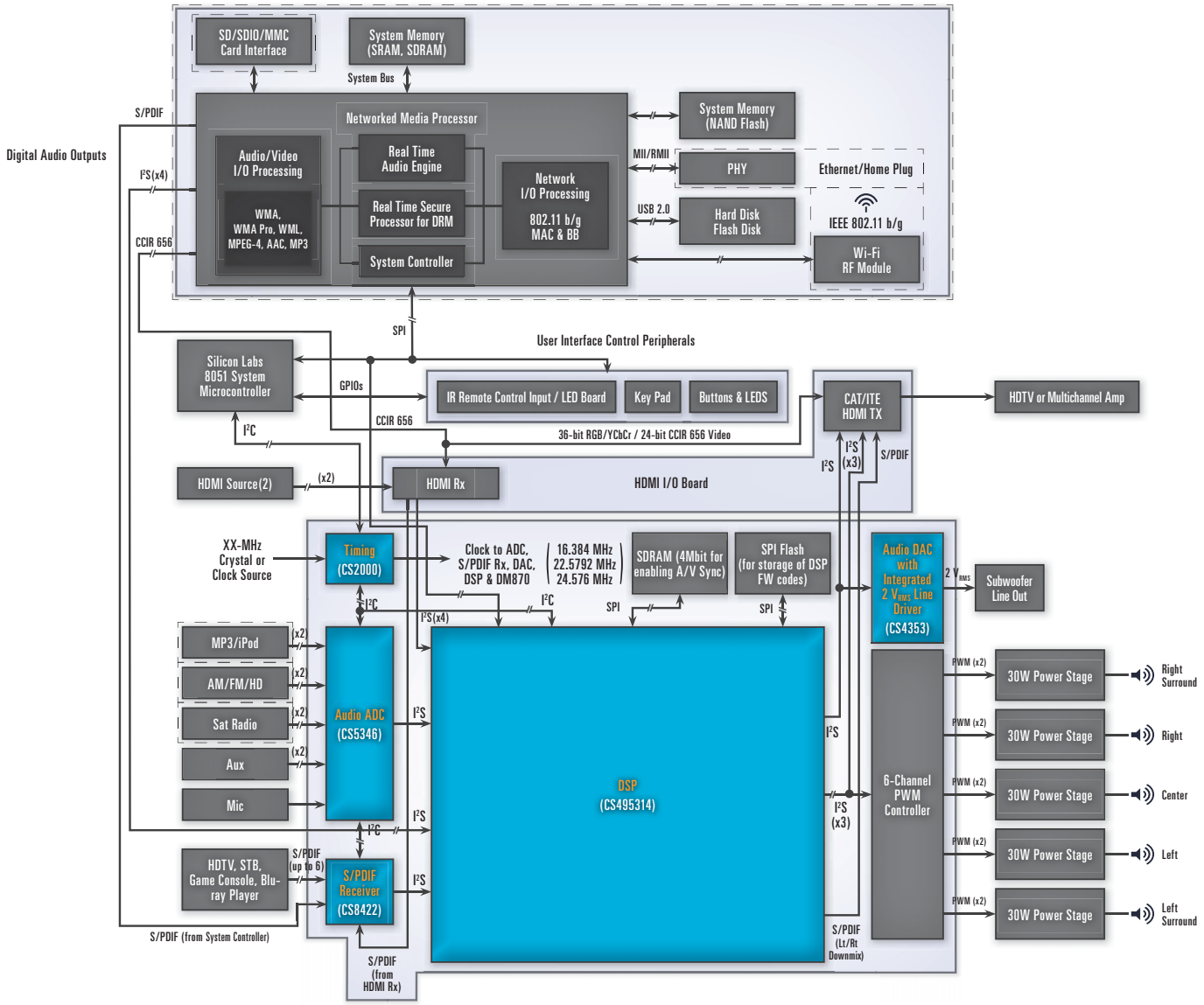

FEATURES

- Dolby Digital
- Dolby Digital EX
- DTS Digital Surround
- DTS 96/24
- DTS-ES Extended Surround
- MPEG-2 AAC LC
- Linear PCM
- WMA Stereo
- MP3
- MP3 Surround
- MPEG-4 HE-AAC
- Cirrus Original Multichannel Surround 2 PCM Processor for Environment Creation
- Audistry
- AudysseyEQ
- Audyssey Dynamic Volume
- Audyssey Dynamic EQ
- Audyssey BassXT
- Audyssey SpatialEQ
- Dolby Pro Logic II/IIx
- Dolby Virtual Speaker
- Dolby Volume
- DTS Neo:6 / Neural Surround
- DTS Surround Sensation Speaker
- SRS TruVolume
- SRS TruSurround XT/HD/HD4
- SRS WOW HD
- Cirrus Original Multichannel Surround
- Cirrus Virtualizer Technology
- Cirrus Band XpandeR
- Tone Control
- Re-EQ
- Parametric EQ
- Compressor/Limiter
- Bass Management
- Ind. Channel Delay
- A/V Sync
- Volume Control
- Custom Audio Processing

Camcorder

Portable Audio

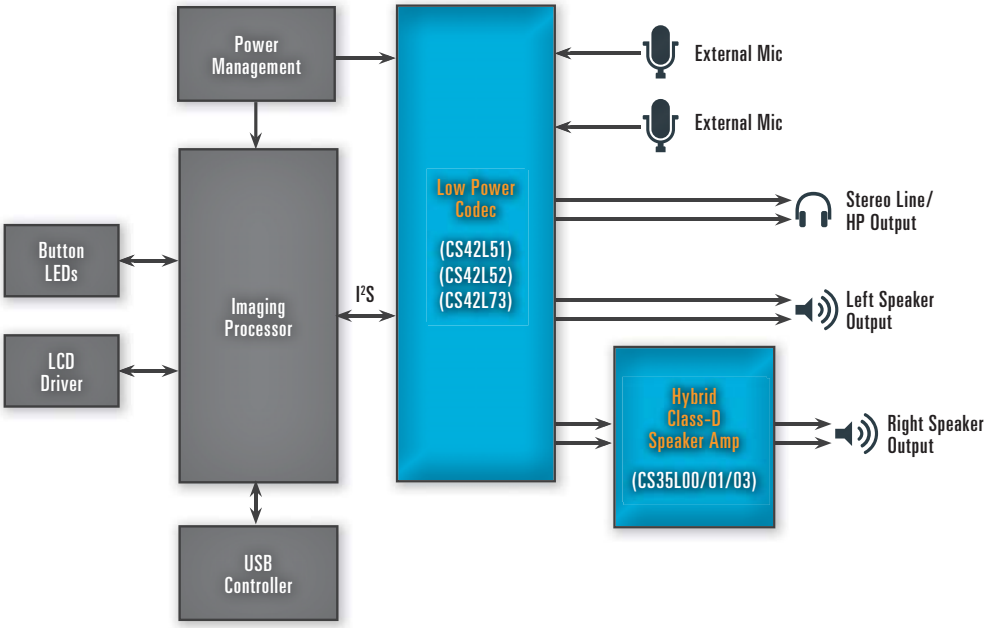

MP3 Player

Portable Audio

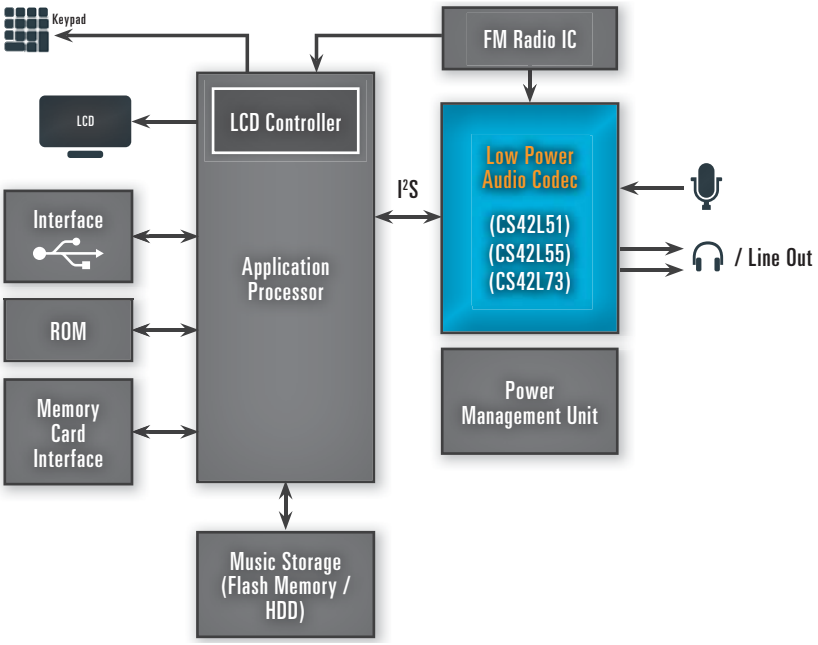

Portable Media Player

Portable Audio

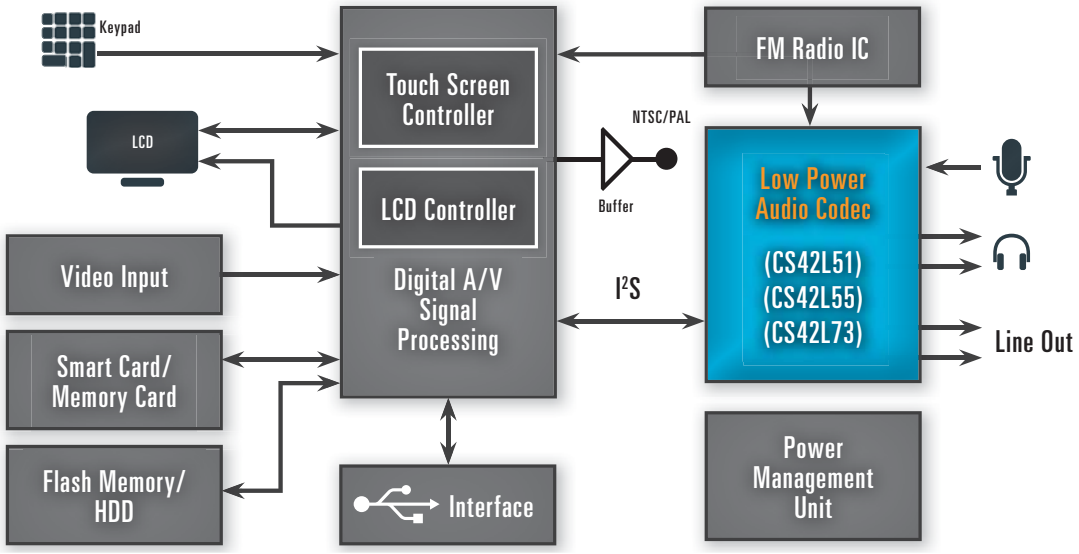

Portable Navigation Device (PND)

Portable Audio

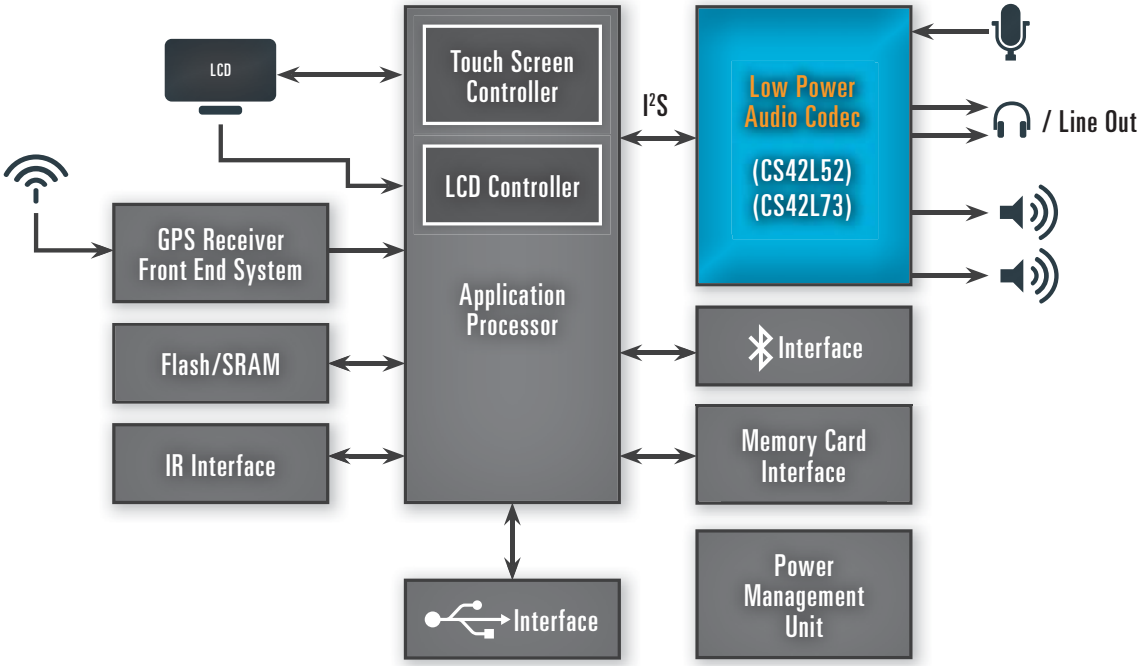

Smart Phone

Portable Audio

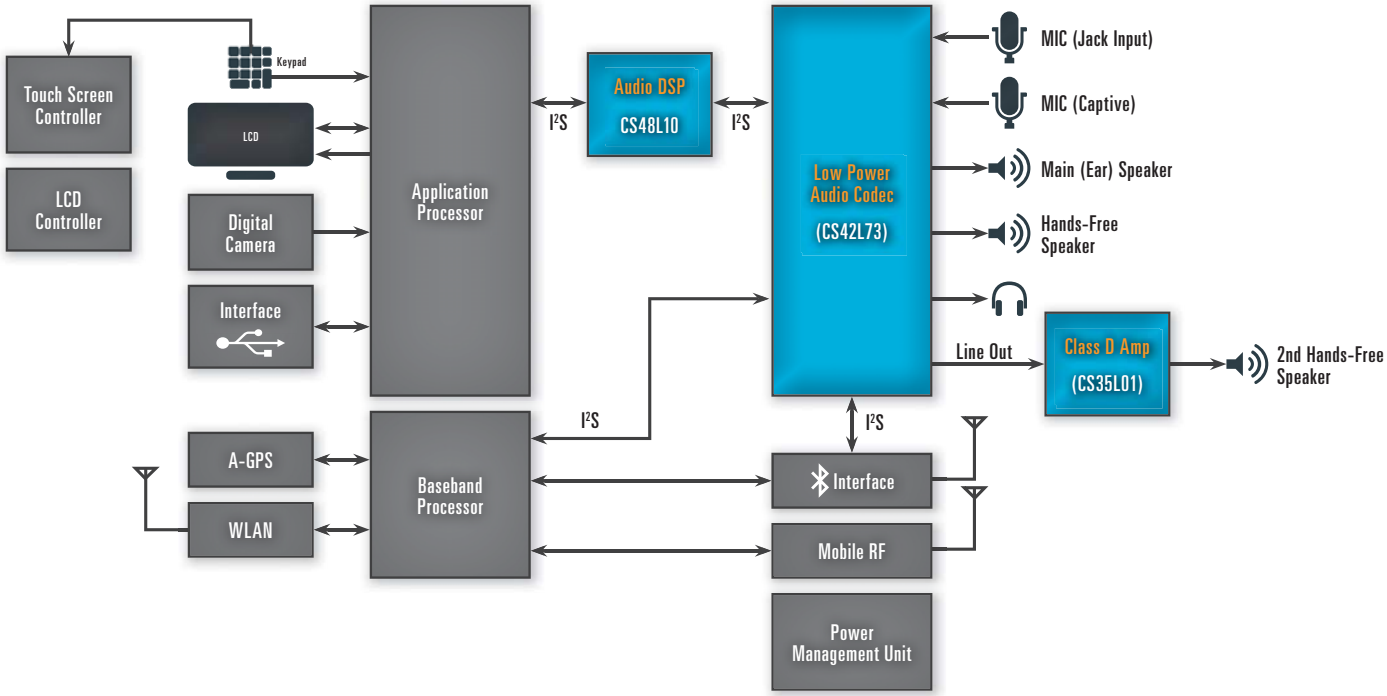

Tablet PC

Portable Audio

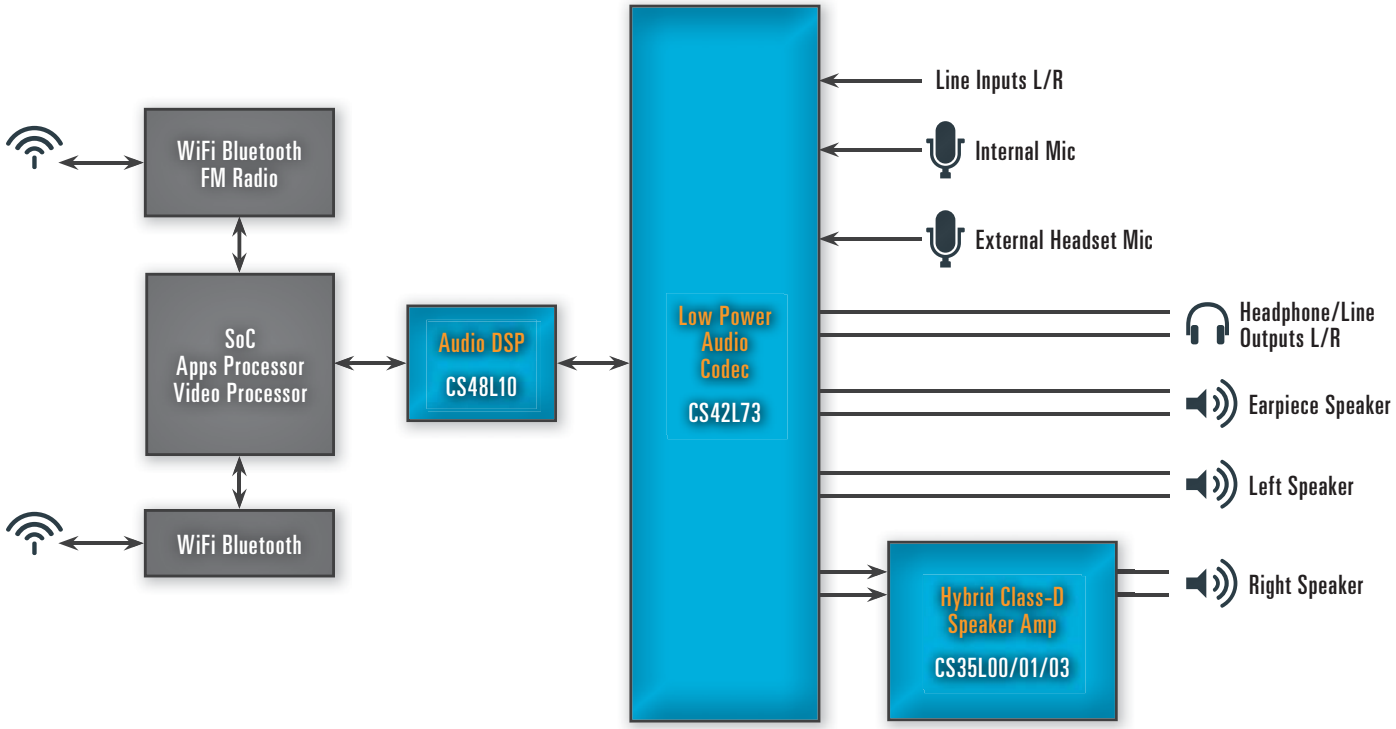

Ultrabook (HD Audio)

Portable Audio

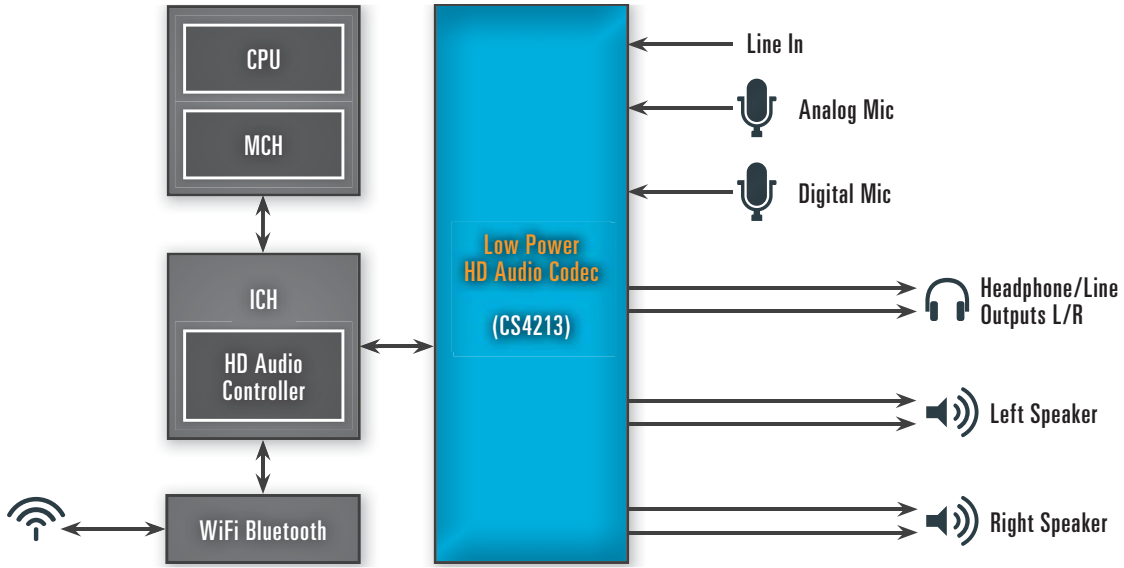

Ultrabook (I^2S Audio)

Portable Audio

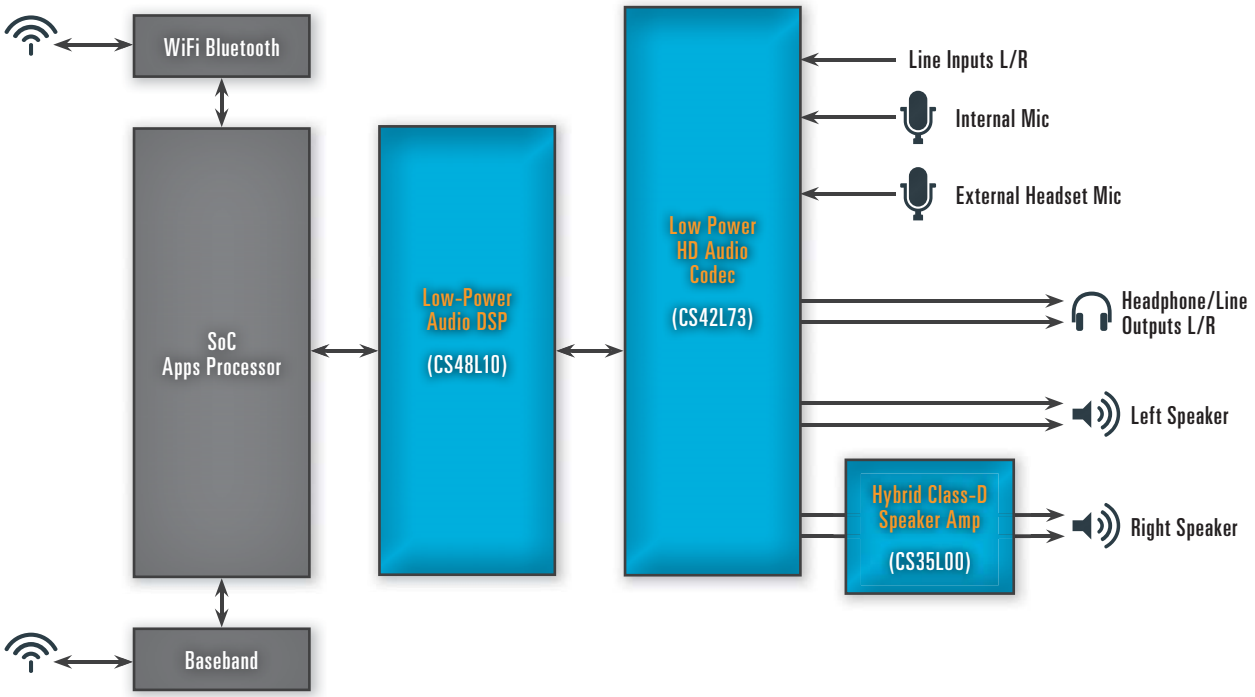

Audio Interface

Professional Audio

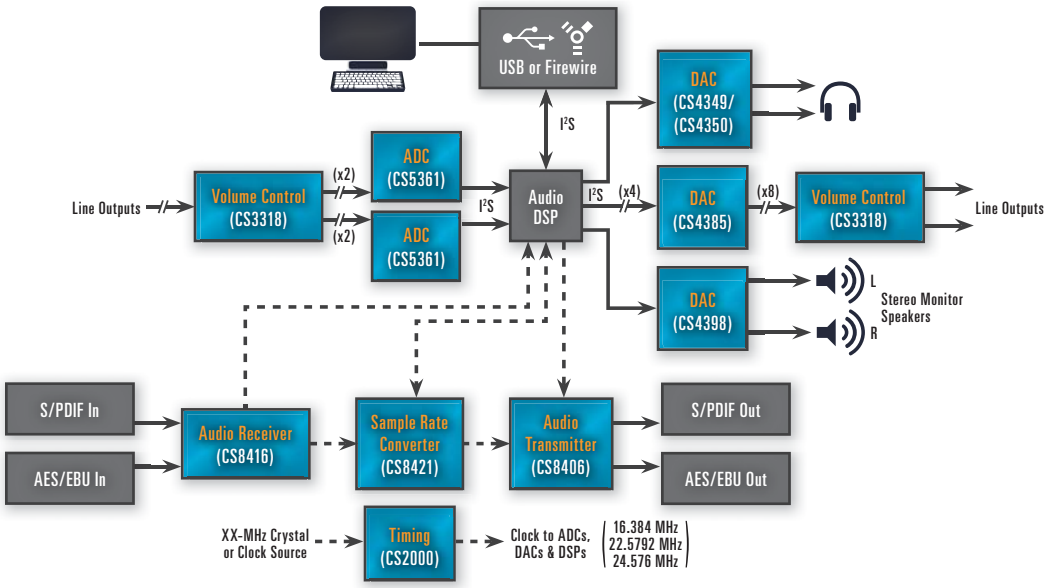

Mixing Console

Professional Audio

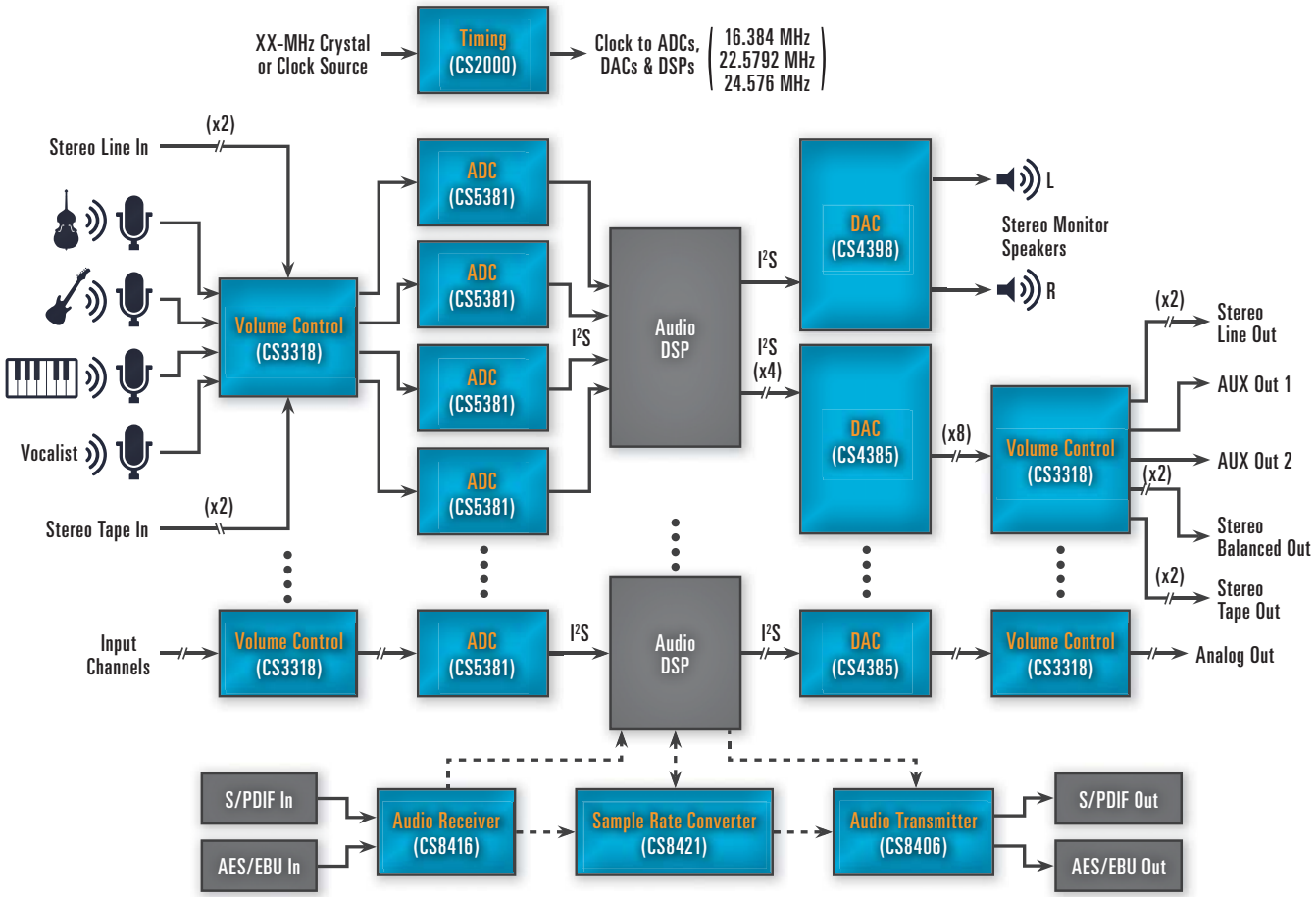

Audio Components

DIGITAL AUDIO PROCESSING

Audio DSPs
- CS485xx Family
- CS495314
- CS497014

Audio DSP — Low Power
- NEW CS48Lxx Family

Audio SOCs
- CS470xx Family

CobraNet
- CS1810xx
- CS4961xx
- CM-1
- CM-2
- EV-2
- CobraCom

MIXED-SIGNAL AUDIO COMPONENTS

Audio A/D Converters
- CS5340
- CS5341/42
- CS5343/44
- CS5346
- CS5351
- CS5361
- CS5364/66/68
- CS5381

Audio D/A Converters
- CS4334/35/38/39
- CS4344/45/48
- CS4349
- CS4350
- CS4351
- CS4352
- CS4353
- CS4354
- CS4361
- CS4362A/82A
- CS4364/84
- CS4365/85
- CS4385A
- CS4392
- CS4398

Stereo Codecs
- CS4245
- CS4265
- CS4270
- CS4271
- CS4272

HD LP Audio Codecs
- CS4207
- NEW CS4210
- NEW CS4210A
- NEW CS4213

AC '97 Codecs
- CS4202
- CS4205
- CS4299

Multichannel Codecs
- CS42416/26
- CS42418/28
- CS42432
- NEW CS4234
- CS42435
- CS42436/38
- NEW CS4244
- CS42448
- CS42516/26
- CS42518/28
- CS42888

Portable Audio Converters
- CS42L51
- CS42L52
- CS42L55
- CS42L73
- CS43L21
- CS43L22
- CS53L21

Low Power Class-D Audio Amplifiers
- CS35L00
- CS35L01
- CS35L03

Integrated Class-D Audio Amplifier
- CS4525

Interface & Sample-Rate Converters
- CS8406
- CS8416
- CS8420
- CS8421
- CS8422
- CS8427

Timing Solutions
- CS2xxx Family

Volume Control
- CS3308
- CS3310
- CS3318

Specifications

Audio DSPs

Part	Processor	Key Firmwares & Features	DSP Core Speed	Grade†	Package
CS485xx	**Tiny, cost effective, mega-performance PCM processors targeted for: mini-systems, DVD receivers, soundbars, car audio, DTVs**				
CS48520	Single 32-bit	4 channel audio PP1	150 MHz (300 M MAC/Sec)	CQZ	48 QFP
CS48540	Single 32-bit	8 channel audio PP1	150 MHz (300 M MAC/Sec)	CQZ	48 QFP
			150 MHz (300 M MAC/Sec)	DQZ	
CS48560	Single 32-bit	> 8 channel audio PP1	150 MHz (300 M MAC/Sec)	CQZ	48 QFP
			150 MHz (300 M MAC/Sec)	DQZ	
CS4953xx	**Single-chip multistandard surround sound decoder targeted for playback from analog & S/PDIF sources**				
CS495314	Dual 32-bit	(DD, DDEX, DTS, DTSES, DTS96, AAC) + PP2	150 MHz (600 M MAC/Sec)	CVZ	128 LQFP
			131 MHz (600 M MAC/Sec)	DVZ	
CS4970xx	**Single-chip multistandard surround sound decoder targeted for playback from HD DVD™, Blu-ray Disc® players, & all analog, S/PDIF & HDMI® sources**				
CS497014	Dual 32-bit	(DD+, DTHD, DD, DDEX, AAC) + PP2	150 MHz (600 M MAC/Sec)	CVZ	128 LQFP
			131 MHz (600 M MAC/Sec)	DVZ	

†C grade parts have a temperature range between 0ºC and 70ºC, D grade parts have a temperature range between -40ºC and 85ºC, and E grade parts have a temperature range between -40ºC and 105ºC.

Specifications

Audio DSPs — Low Power

Part	Processor	Key Firmwares & Features	DSP Core Speed	Grade†	Package
CS48Lxx	**Ultra low power voice and Audio DSP subsystem**				
CS48L10	Single 32-bit	MP3, WMA, AAC	1.0 V 80 MHz	CNZ	24 QFN 24 WLSCP
			1.2 V 130 MHz	CWZ	
			1.0 V 80 MHz	DNZ	
			1.2 V 130 MHz	DWZ	
			1.0 V 80 MHz	ENZ	
			1.2 V 130 MHz	EWZ	
CS48L11	Single 32-bit	MP3, WMA, AAC, AC3, OH, PL2	1.0 V 80 MHz	CNZ	24 QFN
			1.2 V 150 MHz		
			1.0 V 80 MHz	DNZ	
			1.2 V 150 MHz		
			1.0 V 80 MHz	ENZ	
			1.2 V 150 MHz		

NEW

†C grade parts have a temperature range between 0ºC and 70ºC, D grade parts have a temperature range between -40ºC and 85ºC, and E grade parts have a temperature range between -40ºC and 105ºC.

Audio SOCs (DSP with Integrated Mixed-Signal)

Part	Processor	Resol. Bits	Dynamic Range (dB)	Convertors	Comments	Speed (MIPS)	Grade†	Package
CS470xx	Tiny, cost effective, mega-performance PCM processors with integrated Codec targeted for mini-systems, DVD receivers, soundbars, sound projectors, car audio, DTVs. DSP Composer, a graphical DSP programming tool from Cirrus Logic, makes advanced DSP programming of this integrated device family easy.							
CS47024	Single 32-bit	24	105 ADC 108 DAC	2 - ADC 4 - DAC	2 ADC w/ 5:1 MUX, 4 DAC, S/PDIF Rx/Tx, 8 channel HW SRC block	150 MHz	CQZ	100 LQFP
						131 MHz	DQZ	
						113 MHz	EQZ	
CS47028	Single 32-bit	24	105 ADC 108 DAC	2 - ADC 8 - DAC	2 ADC w/ 5:1 MUX on 1 ADC, 8 DAC, S/PDIF Rx/Tx, 8 channel HW SRC	150 MHz	CQZ	100 LQFP
						131 MHz	DQZ	
						113 MHz	EQZ	
CS47048	Single 32-bit	24	105 ADC 108 DAC	4 - ADC 8 - DAC	4 ADC w/ 5:1 MUX, 8 DAC, S/PDIF Rx/Tx, 8 channel HW SRC	150 MHz	CQZ	100 LQFP
						131 MHz	DQZ	
						113 MHz	EQZ	

†C grade parts have a temperature range between 0ºC and 70ºC, D grade parts have a temperature range between -40ºC and 85ºC, and E grade parts have a temperature range between -40ºC and 105ºC.

Algorithm & Nomenclature Abbreviations

Decoding Algorithm & Nomenclature Abbreviation Table	
AAC = MPEG-2 AAC Multichannel Low Complexity	DTSLBR = DTS Express
CBR = Constant Bit Rate	DTSMA = DTS® Master Audio
DD = Dolby Digital®	ES = Elementary Stream
DD+ = Dolby Digital Plus	HE-AAC = MPEG-4 AAC Multichannel Low Complexity
DDCE = Dolby Digital Consumer Encoder (5.1 Channel)	MP3 = MPEG 1, Layer II & III CBR & VBR
DDEX = Dolby Digital EX®	MPEG = MPEG 2, Layer II Stereo & Multichannel
DTHD = Dolby® TrueHD	PES = Packetized Elementary Stream
DTS = DTS Digital Surround™	PP = Post-Processing
DTS96 = 96 kHz/24-bit	PULSE = Dolby Pulse (MPEG-4 AAC Multichannel Low Complexity Decoder with Metadata Support)
DTSENC = DTS Digital Surround Encoder (5.1 Channel)	STCR = Dolby Stereo Creator
DTSES = DTS-ES™ Matrix/Discrete	VBR = Variable Bit Rate
DTSHRA = DTS® High-Resolution Audio	

Post-Processing (PP1) Inclusion & Algorithm Abbreviation Table	
APP = Advanced Post-Processor	DVS = Dolby Virtual Speaker® 2
BXR = Cirrus Band XpandeR™	L7 = Logic7™
CBE = Cirrus Bass Enhancement	LIM = Compressor/Limiter
CBM = Cross-Bar Mixer	NEO = DTS Neo:6™
CSHP = SRS Circle Surround Headphone (includes SRS HP 360º & Circle Surround)	NER = DTS Neural Surround
CVT = Cirrus Virtualization Technology	PEQ = Parametric EQ
DH = Dolby Headphone® 2	PL = Dolby® Pro Logic®
DVL = Cirrus® Dynamic Volume Leveler	PLII = Dolby Pro Logic II
DVOL = Dolby Volume	PLIIx = Dolby Pro Logic® IIx
DVOLMC= Dolby Volume Multichannel	PLZz = Dolby Pro Logic IIz
REEQ = THX Cinema Re-EQ™	TSXT = SRS® TruSurround XT®
SPP = Stand Post-Processory	TUX = THX Select2/Ultra2™ Surround EX
TB = SRS TruBass®	TV = SRS TruVolume®
TC = Tone Control	TVMC = SRS TruVolume Multichannel
TEX = THX Surround EX™	WOW = SRS® WOW™
THX = THX® Cinema	WOWHD = SRS WOW HD™
TSHD = SRS TruSurround® HD/HD4	

Post-Processing (PP2 includes all of the above +) Inclusion & Algorithm Abbreviation Table	
AUD = Audistry®	DYNVOL = Audyssey Dynamic Volume® / Dynamic EQ®
AUDY = Audyssey® MultEQ XT™	TUX+ = THX Select2/Ultra2™ Surround EX™ with Loudness Plus

CS485xx

Consumer Audio

Features

- Multichannel 32-bit audio post processing at 150 MHz
- Up to 4 channels of 32-bit PCM input/output (CS48520)
- Up to 8 channels of 32-bit PCM input/output (CS48540)
- Up to 12 channels of 32-bit PCM input/output (CS48560)
- 192 kHz S/PDIF Tx
- SPI/I^{2}C master/slave serial control port
- Low-power standby mode
- Hardware watchdog timer
- Up to 19 GPIOs available
- Dual clock domains on PCM input
- Dual processing paths on PCM output
- Customer software security keys
- 24K x 32 RAM
- Programmable via DSP Composer with help from Micro Condenser
- Licensed 3rd party audio processing algorithms in ROM
  - Dolby Headphone 2, Dolby Virtual Speaker 2
  - SRS TruSurround XT
  - Dolby ProLogic II & Dolby ProLogic IIx
  - SRS CSII / SRS CS Auto
- Cirrus Original Multichannel Surround (COMS)
- Licensed 3rd party algorithms or custom firmware can be downloaded through SPI/I^{2}C port
  - Audistry
  - Maxx Bass
  - Dolby TV
  - Dolby Volume
  - DTS Neural Surround
  - DTS Neo:6
  - SRS CircleSurround Headphone
  - SRS TruDialog
  - SRS StudioSound HD
  - SRS TruSurround HD/HD4
  - SRS TruVolume
- And more...

Differentiating from the legacy Cirrus Logic multi-standard, multichannel decoders, the CS485xx Family are based on the high-performance 32-bit, fixed-point digital signal processor core, with lower memory, tailoring them for more cost-effective applications associated with multichannel and virtual-channel sound enhancements.

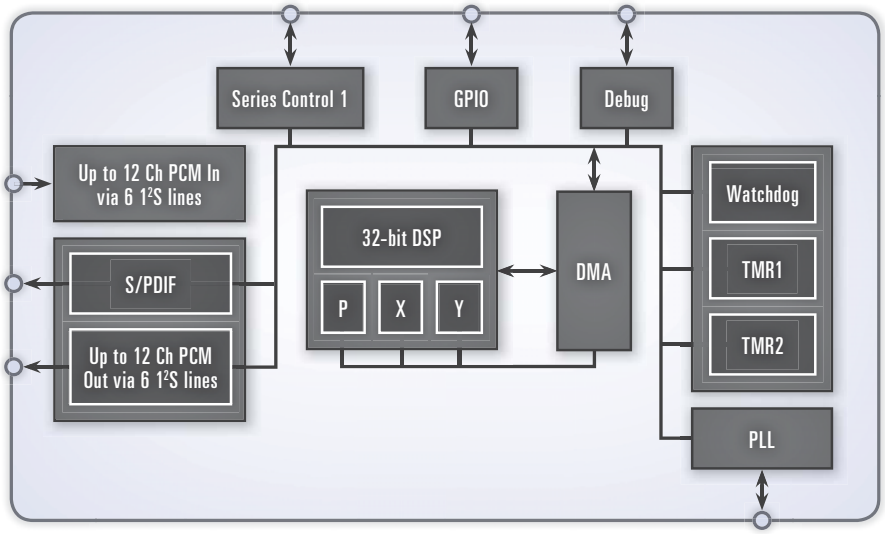

CS495314

Consumer Audio

Features

- Powerful 32-bit, dual core audio DSPs
  - Multi-standard 32-bit audio decoding plus post processing
- Up to 12 channels of 32-bit serial audio input
- 16 channels of 32-bit PCM output with dual 192 kHz
- S/PDIF transmitter
- Two SPI/I²C
- SDRAM and serial flash memory support
- Customer software security keys
- Large on-chip X, Y and program RAM & ROM
- Framework™ applications library in ROM
  - Dolby Digital Pro Logic II, Dolby Digital Pro Logic IIx, Dolby Digital EX, Dolby Headphone, Dolby Virtual Speaker 2
  - DTS-ES 96/24™, DTS-ES™ Discrete 6.1, DTS-ES Matrix 6, DTS: Neo6
  - SRS Circle Surround™, SRS TruSurround XT
  - THX Ultra2, THX Surround EX
  - MPEG-2 AAC LC Multichannel
  - WMA 9, MP3
  - Cirrus Original Multichannel Surround (COMS)
  - Crossbar mixer, signal generator
  - Advanced Post-Processor including: 7:1 bass manager, tone control, 12-band parametric EQ, delay, 1:2 upsampler
- Framework applications for download
  - Thomson MP3 Surround
  - Audyssey ABX
  - AudysseyEQ
  - Audyssey Dynamic Volume
  - Audyssey Dynamic EQ
  - Audyssey BassXT
  - Dolby Pro Logic IIz 7.1
  - Dolby Volume Multichannel
  - SRS CircleSurround Headphone
  - SRS TruDialog
  - SRS TruSurround HD/HD4
  - SRS TruVolume Multichannel

The CS495314 is implemented with dual 32-bit fixed point cores. Within each core exists twin 72-bit multiply accumulators. The CS495314 includes all mainstream audio processing codes in on-chip ROM. This saves external memory for code storage. In addition, the intensive decoding tasks of Dolby Digital EX, MPEG-2 AAC LC multichannel, DTS-ES 96/24, THX Ultra2 Cinema and Dolby Headphone can be accomplished without the expense of external SDRAM memory. With up to 150 MHz per core, the CS495314 supports the most demanding post processing requirements. The CS495314 supports all license free and Dolby algorithms, and DTS technologies.

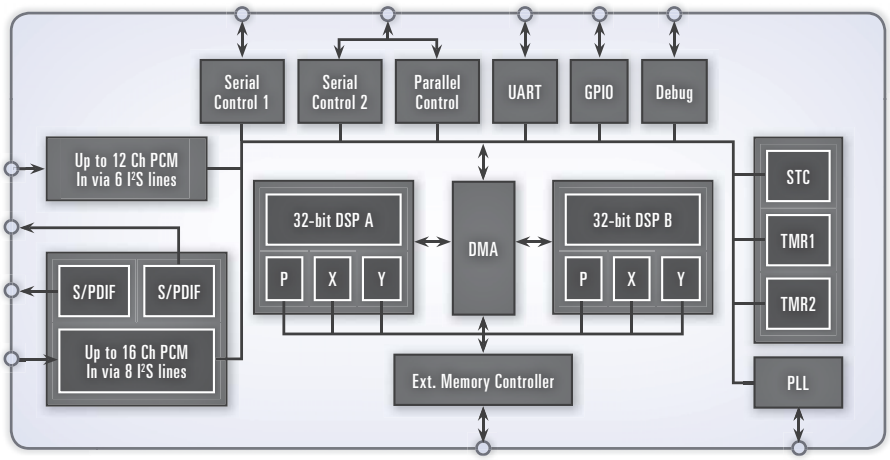

CS497014

Consumer Audio

Features

- Up to 12 channels of 32-bit serial audio input
- Multi-standard 32-bit high definition audio decoding plus post processing
- Supports high-definition audio formats including:
  - Dolby Digital Plus
  - Dolby TrueHD
- Additional Applications Library
  - Dolby Digital EX, Dolby Pro Logic IIx, Dolby Headphone, Dolby Virtual Speaker
  - AAC Mutlichannel 5.1
  - SRS® CS2® and TSXT®
  - THX Ultra2, THX ReEQ
  - Crossbar Mixer, Signal Generator
  - Advanced Post-processor including: 7.1 Bass Manager, Tone Control, 11- Band Parametric EQ, Delay, 1:2 Upsampler
  - Thomson MP3 Surround, DTS Neo:6, Neural Surround, Cirrus Original Multichannel surround 2 (COMS2)
  - Audyssey ABX
  - AudysseyEQ
  - Audyssey Dynamic Volume
  - Audyssey Dynamic EQ
  - Audyssey BassXT
  - Dolby Pro Logic IIz 7.1
  - Dolby Volume Multichannel
  - SRS CircleSurround Headphone
  - SRS TruDialog
  - SRS TruSurround HD/HD4
  - SRS TruVolume Multichannel

The CS497014 DSP offers the mainstream audio processing codes in onchip ROM and also supports the decoding of major high-definition audio formats. The CS497014, a dual-core device, performs the high-definition audio decoding on the first core, leaving the second core available for audio post-processing and audio enhancement. The CS497014 device will support the most demanding audio post processing requirements.

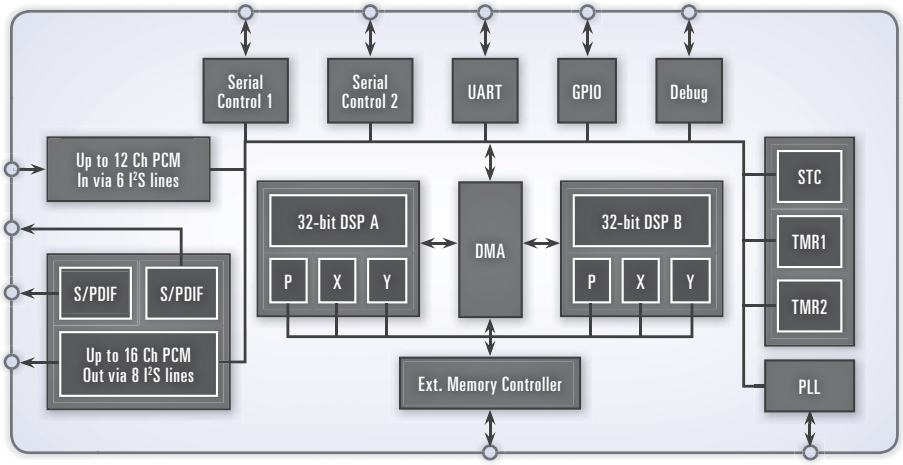

CS48L10/11

Consumer Audio

Features

- Up to 130 MHz for the CS48L10 and up to 150 MHz for the CS48L11 single-core 32-bit DSP
  - Advanced Harvard architecture with separate X, Y, and P memory space
  - Fixed-point DSP core can perform 2 multiply-and-accumulate (MAC) operations (32 x 32) per clock cycle
  - Eight 72-bit accumulators
- Memory Configurability
  - 20 K words of 32-bit X-data RAM
  - 24 K words of 32-bit Y-data RAM
  - 20 K words of 32-bit P-code RAM
  - Y-data/P-code RAMs support three more configurations: 28/16, 20/24, 16/28
- 40 K x 32 total ROM
- Ultralow power consumption: 0.1 mW/MHz (typical code, core supply only)
- On-chip 8-channel DMA
- Configurable serial audio inputs and outputs
  - Master or slave mode for digital audio inputs (DAI) (up to 6-ch I²S or 8-ch TDM)
  - Master or slave mode for digital audio output (DAO) (up to 6-ch I²S or 8-ch TDM)
  - Supports Fs sample rates of 8, 12, 16, 24, 32, 44.1, 48, 96, and 192 KHz
- I²C or SPI serial interface port
  - Master or slave operation
- Integrated clock manager/PLL
  - Flexibility to operate from internal PLL or external oscillator
- Internal programmable interrupt controller (PIC)
- Timers and watchdog
  - Configurable GPIOs
- 1.0–1.2 V for core and memory 1.8–3.3 V for I/O
- Integrated, high-efficiency power management reduces power consumption
  - X, Y and P memory partitioned into 4 K blocks (8 K blocks for P ROM)
  - Each memory block has independent power down control
  - DSP core clock scaling and voltage scaling
  - Low-power modes for DSP core
- CS48L11 supports decoding Dolby Digital™ compressed audio format
- CS48L11 supports post-processing like Dolby Pro Logic®II, Dolby Headphone®2, SSHD

The CS48L10/11 ultralow power voice and audio DSP has been designed to bring best-in-class audio processing capability to mobile, portable or home audio applications, while having minimum impact on overall system power consumption. The CS48L10/11 provides designers with the opportunity to enhance, improve, and differentiate their products, while simultaneously reducing the audio-processing burden on the main system processor.

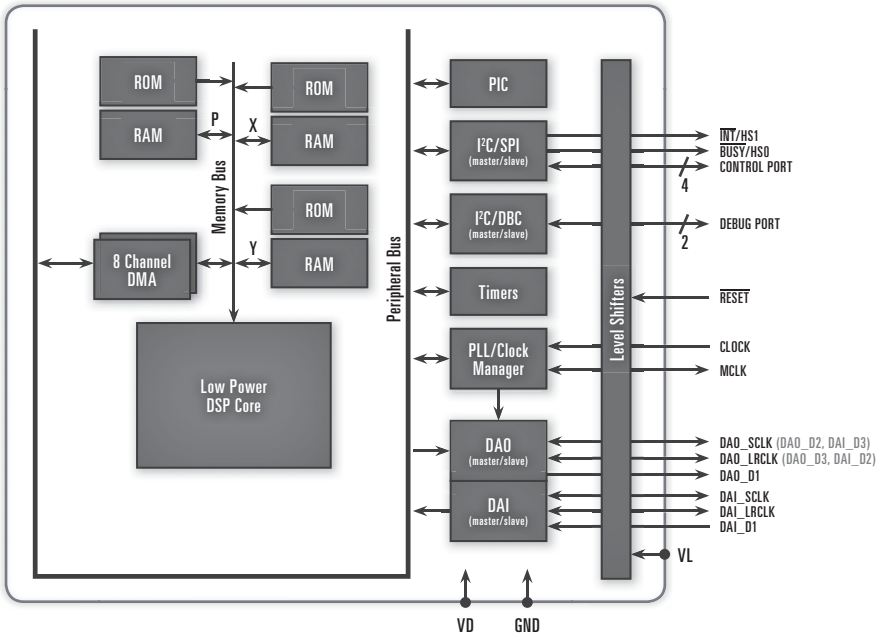

CS470xx

Consumer Audio

Features

- Multichannel 32-bit audio processing at 150 MHz with dual MACs & 72-bit accumulator
- Advanced Delta-Sigma converter architecture
- Single-ended or differential analog I/O
- Up to 4-channel 24-bit, 105 dB ADC
- Stereo 5:1 analog input MUX
- Up to 8-channel 24-bit, 105 dB DAC
- Integrated 192 kHz S/PDIF Rx and Tx
- Integrated multichannel, reassignable SRCs
- Supports both TDM (Time-division Multiplexed) and standard serial audio formats
- SPI™/I²C serial control port
- Low-power standby: 350 µW
- 32 K x 32 RAM which is reassignable
- DSP Composer GUI simplifies programming and generation of custom signal processing using extensive library of primitives
- Licensed third party audio processing algorithms in ROM, plus extensive library of Cirrus proprietary downloadable and customizable firmware
- Excellent development tools to simply system design and provide faster time to market
- Easy to design – most standard processing features and some third party algorithms in ROM
- Best in class analog performance and sound quality
- High level of integration enables small PCB footprint and lower system cost
- No external memory needed

The CS470xx family audio SOC gives OEMs a cost-effective and simple-to-design audio processing solution with integrated high-performance mixed signal that provides an extensive selection of enhanced audio features to maximize the end user's listening experience within the automotive entertainment space.

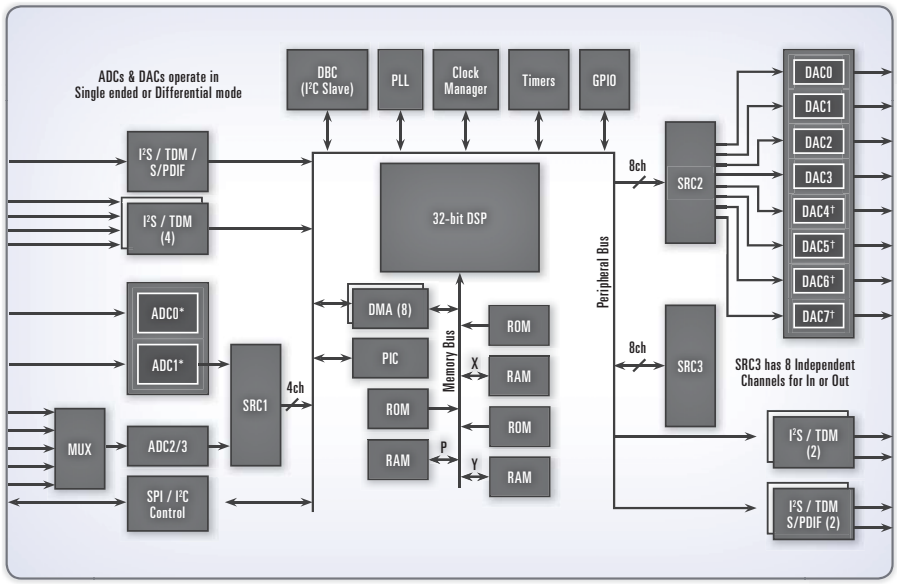

* Only available in the CS47048
† Only Available in the CS47028 and CS47048

Specifications

CobraNet® Transport and Audio Network Processor ICs

Family	Description	CobraNet Part Numbers	Audio Channels over Ethernet	Serial Input/ Serial Output Ports	Ethernet Interface	IC Package
CS1810xx CS4961xx*	The CS1810xx family contains CobraNet® networked digital audio interface ICs. The CS4961xx family provides digital audio signal processing along with the network interface function.	CS181002 CS496102*	2	One synchronous, capable of supplying up to 2 full-duplex channels at 48 and/or up to 96 kHz sample rates.	Supports 100BASE-Tx, 100 Mbps, full duplex Ethernet, fully compliant with IEEE 802.3u.	144 LQFP
		CS181012 CS496112*	8	Quad synchronous, capable of supplying up to 8 full-duplex channels at 48 and/or up to 96 kHz sample rates.		
		CS181022 CS496122*	16	Quad synchronous, capable of supplying up to 16 full-duplex channels at 48 kHz, or up to 8 channels at 96 kHz sample rates.		

*The CS4961xx series includes a 32-bit, 120 MIPS digital signal processor for audio processing of any or all channels.

Features

CobraNet Software Tools

DSP Conductor™	DSP Conductor software is a powerful, graphical tool for rapid, drag-and-drop audio signal processing firmware development on CS4961xx-based platforms, such as the CM-2 module or an OEM's custom hardware. Drawing upon a comprehensive library of DSP functions, an OEM can design the audio processing of a product, then lock the DSP firmware down into the CS4961xx-based CobraNet product. These audio functions can be controlled either by the product's user interface or through remote SNMP commands over the CobraNet Ethernet LAN. Further, any CS4961xx node can be reprogrammed in real-time from a PC on the network, enabling multi-purpose products to serve different audio processing functions for different applications at the push of a button.
CobraCAD™	CobraCAD software is a graphical, drag-and-drop design and verification tool for modeling a network of CobraNet-enabled gear and standard Ethernet switches. A library of commercially available, CobraNet-enabled products is the place to start for designing a virtual CobraNet network, then making sure it will perform as required. CobraCad™ software is ideal for consultants and integrators preparing a bid for a client and for installers and expert end users who need to visualize the network before or after deployment.
CobraNet® Discovery	CobraNet Discovery is a CobraNet network maintenance utility that automatically discovers CobraNet devices on the network, configures them and queries and reports the working state of a CobraNet network and its devices. Discovery also provides a CobraNet firmware update function.

Specifications

CobraNet System Modules and Reference Designs

Product	Description	CobraNet Part Numbers	Audio Channels over Ethernet (full-duplex)	Serial Input/ Output Ports	Ethernet Interface	Integrated DSP (MIPS)	Board Dimensions
CM-1	Digital audio network interface module with dual Ethernet ports	See your Cirrus Logic sales representative for available models.	32	Quad synchronous, up to 32 channels at 48 and/or up to 96 kHz sample rates	100BASE-Tx, 100 Mbps, full duplex Ethernet, fully compliant with IEEE 802.3u	—	3.5" X 3.5"
CM-2	Digital audio network interface module with dual Ethernet ports and audio DSP (available as reference design)	CPB181012-CM2, CPB181022-CM2 and CPB496122-CM2 (all are available with female-bottom or male-top headers)	16	Quad synchronous, capable of supplying up to 16 full-duplex channels at 48 kHz sample rate or up to 8 full-duplex channels at 96 kHz sample rate	100BASE-Tx, 100 Mbps, full duplex Ethernet, fully compliant with IEEE 802.3u	32-bit DSP, 120 MIPS	3.5" X 3.5"
EV-2	CobraNet evaluation and development platform for use with the CM-1 and CM-2 modules	CDB-496122-EV2	16	One digital AES3 input stream (two channels) or one digital AES3 output stream (two channels). Two analog audio input channels, two analog audio output channels	100BASE-Tx, 100 Mbps, full duplex Ethernet, fully compliant with IEEE 802.3u	32-bit DSP, 120 MIPS	8" X 7"
CobraCom	CobraNet microphone and network-powered loudspeaker reference design	CRD-CobraCom	16	Using the CS4961xx series provides up to 16 audio channels with audio DSP capability	100BASE-Tx, 100 Mbps, full duplex Ethernet, fully compliant with IEEE 802.3u and 802.3af Power-over-Ethernet	32-bit DSP, 120 MIPS	5.4" X 4"

CS1810xx

CobraNet Transport Processors

Features

- Implements the CobraNet standard for synchronous, networked digital audio for immediate compatibility with other CobraNet enabled audio products
- Compatible with standard, IEEE 802.3 Ethernet technology and network products
- Maintains a sub-nanosecond-jitter audio clock synchronized across the network of devices for precise audio processing
- Three IC models provide networking of 2, 8 or 16 full duplex, pro quality audio channels
- Digital audio sample sizes of 16, 20, and 24 bits
- Pro audio sample rates of 48 and 96 kHz
- Transport latency configurable for 5.33, 2.66, or 1.33 ms between similarly configured devices across a network
- Quad 32-bit synchronous serial digital audio I/O ports interface flexibility to the product's custom audio processing functions
- Asynchronous serial port bridges RS-232, RS-485 to and from other devices on the network, enabling remote status and control
- Available in a lead-free, surface mount, 144-pin LQFP

Applications

- Ceiling and Self-Powered Speakers
- Facility Audio Distribution
- Media Servers
- Microphone Preamps
- Mixing Consoles
- Paging Stations and Intercoms
- Power Amplifiers
- Signal Processors
- Voice Audio Recording, Archival and Playback

The CS1810xx Family provides an easy way for manufacturers to add CobraNet, the de facto industry standard for networked digital audio, to an audio product. Leveraging standard Ethernet technology, the CS1810xx implements the CobraNet transport protocol along with managing other network traffic directed at the audio product.

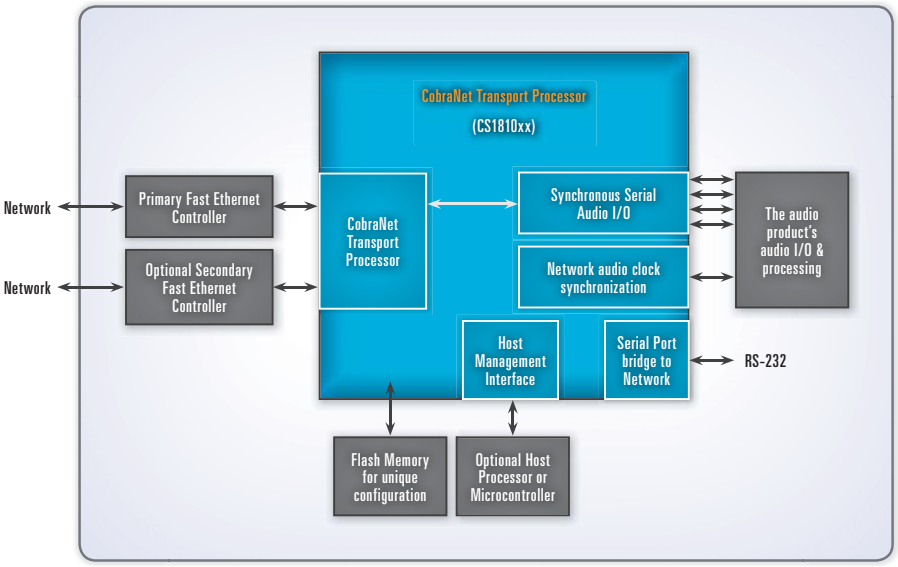

CS4961xx

CobraNet Audio Systems Processors

Features

- Provides all functions of the CS1810xx family and is pin-for-pin, drop-in compatible
- A 32-bit, fixed-point, 120 MIPS DSP core provides audio signal processing to the digital audio streams transported over CobraNet
- Integration of CobraNet transport and audio DSP reduces overall system costs, complexity, and development effort
- Audio signal processing can be applied to audio channels arriving from the network to the product, or from the product on their way to the network
- DSP Conductor Windows-based software provides a graphical, drag-and-drop DSP programming environment, eliminating the need for assembly of C coding of audio functions
- Audio DSP functions created with DSP Conductor can be locally controlled by the OEM's user interface or remotely over the CobraNet network through SNMP commands, creating new ways to manage an audio network

Applications

- Ceiling and Self-Powered Speakers
- Facility Audio Distribution
- Media Servers
- Microphone Preamps
- Mixing Consoles
- Paging Stations and Intercoms
- Power Amplifiers
- Signal Processors
- Voice Audio Recording, Archival and Playback

The CS4961xx Family of ICs takes CobraNet networked digital audio to the next level through the addition of a high-performance audio DSP. Any and all audio streams flowing between the network and the audio product can be locally processed through the use of common functions such as filters, equalizers, compressors, delay lines, gain blocks, and level meters. The CS4961xx and CS1810xx families are completely pin-compatible, allowing the development of different models of audio products with and without local DSP processing.

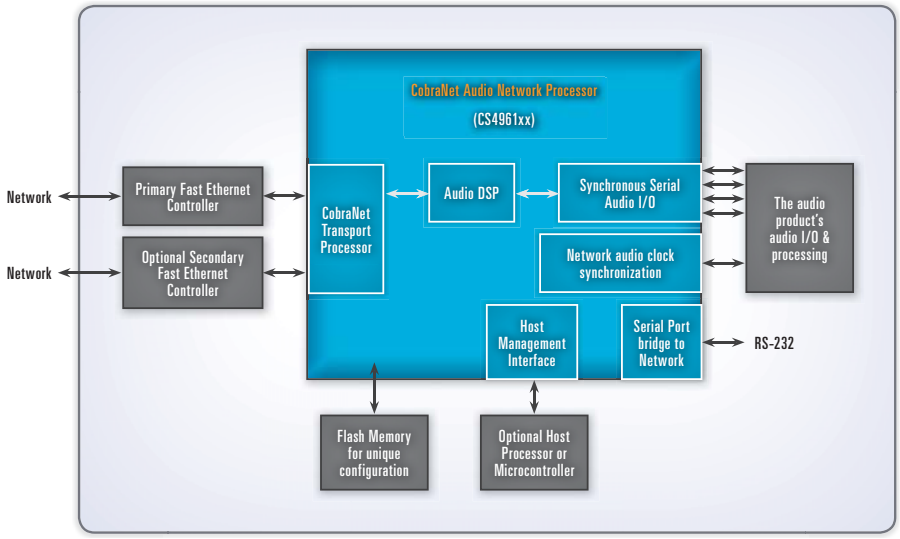

CM-1

CobraNet Module

Features

- 100BASE-Tx Ethernet interface—100 Mbps, full-duplex Ethernet, fully compliant with IEEE 802.3u Standard
- Secondary 100BASE-Tx Ethernet interface—redundant network connection for fault tolerance
- Quad synchronous serial output ports — capable of supplying 32 channels at 48 or 96 kHz sample rates
- Quad synchronous serial input ports—capable of receiving 32 channels at 48 or 96 kHz sample rates
- Studio-grade, low-jitter clock source—less than 1 ns of jitter
- High-speed parallel host port interface—interfaces to an optional external control processor
- SNMP agent—standards-based Ethernet control, monitoring and management
- TFTP support—firmware updates over the network
- Low latency—selectable 1.33, 2.66 or 5.33 ms across network
- Optional remote power through RJ-45 connection—for powering via the Cat-5 Ethernet connection. External circuitry required
- Asynchronous serial I/O port—bridge serial control data over Ethernet
- Status LEDs—link, activity and CobraNet conductor status for each Ethernet jack
- Order CM-1 or CM-1-FW option—the CM-1 Ethernet connector includes an RJ-45 jack with integrated transformer isolation. The CM-1-FW option and includes solder points to be wired to external Ethernet connector

Applications

- Ceiling and Self-Powered Speakers
- Facility Audio Distribution
- Media Servers
- Microphone Preamps
- Mixing Consoles
- Paging Stations and Intercoms
- Power Amplifiers
- Signal Processors
- Voice Audio Recording, Archival and Playback

The CM-1 is a DSP based solution providing an interface in the form of a compact, low-power module. Featuring up to 32 simultaneous bi-directional audio channels, the CM-1 is designed for easy integration into a wide variety of audio products such as signal processors, mixers, amplifiers and powered speakers.

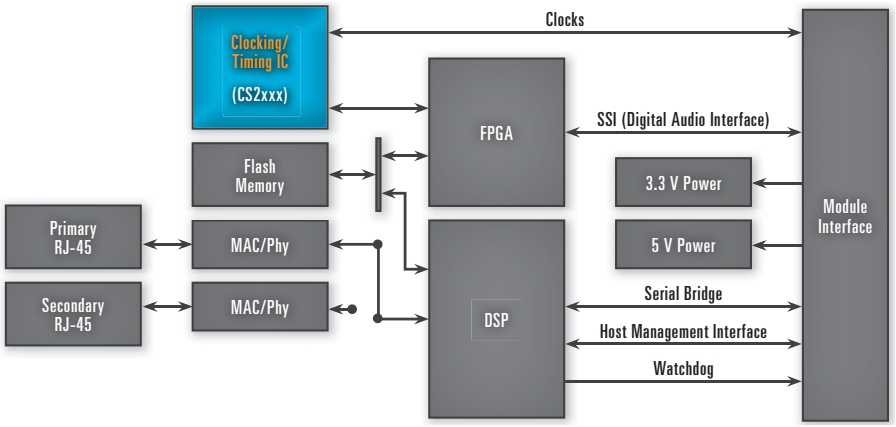

CM-2

CobraNet Module

Features

- 100BASE-Tx Ethernet interface—100 Mbps, full-duplex Ethernet, fully compliant with IEEE 802.3u Standard
- Secondary 100BASE-Tx Ethernet interface—redundant network connection for fault tolerance
- Quad synchronous serial output ports—capable of supplying up to 16 full-duplex channels at 48 or 96 kHz sample rates
- Quad synchronous serial input ports—capable of receiving up to 16 full-duplex at 48 or 96 kHz sample rates
- Studio-grade, low-jitter clock source—less than 1 ns of jitter
- High speed parallel host port interface—interfaces to an optional external control processor
- SNMP agent—standards-based Ethernet control, monitoring and management
- TFTP support—firmware updates over the network
- Low latency—selectable 1.33, 2.66 or 5.33 ms across network
- Optional remote power through RJ-45 connection —for powering via the Cat-5 Ethernet connection. External circuitry required
- Asynchronous serial I/O port—bridge serial control data over Ethernet
- Status LEDs—link, activity and CobraNet conductor status for each Ethernet jack
- License/royalty-free and available as a module or reference design with all deliverables (BOM, schematics, source files) on www.cirrus.com

Applications

- Ceiling and Self-Powered Speakers
- Facility Audio Distribution
- Media Servers
- Microphone Preamps
- Mixing Consoles
- Paging Stations and Intercoms
- Power Amplifiers
- Signal Processors
- Voice Audio Recording, Archival and Playback

The CM-2 is based on the highly integrated CS1810xx or CS4961xx CobraNet Silicon Series, providing an interface in the form of a compact, low-power, low-cost module. Featuring 2, 8 or 16 bi-directional channels, the CM-2 is designed to be easily integrated into a wide variety of audio products such as signal processors, mixers, amplifiers and self-powered loudspeakers.

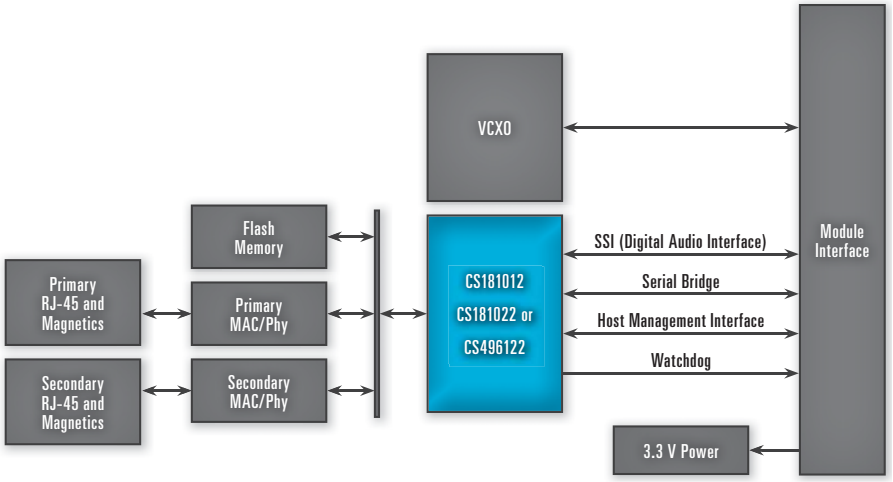

EV-2

CobraNet Evaluation Kit

Features

- Complete, bench-top circuit board platform for evaluating the CobraNet CM-1 and CM-2 modules and for OEM product development
- 2-channel audio ADC input converts to 16, 20 or 24-bit stereo data at 48 or 96 kHz sample rates
- 2-channel 48 or 96 kHz digital audio DAC converts to stereo analog audio output
- Supports AES3 input and output streams
- RS-232 interfaces provide communication with the platform and the CM-2 module
- Configurable sine wave test tones provide an alternate audio test source
- Hex switches for setting location ID of the CM-2 and user development
- 3 LED indicators are supplied for user development

The EV-2 platform provides an easy way to evaluate and develop with CobraNet modules. The EV-2 evaluation kit comes standard with CM-2 modules but will work equally well with CM-1 modules if needed.

The EV-2 platform and kit are available for purchase, after entering into a CobraNet non-disclosure agreement. For additional information on how to obtain the EV-2 kit or CobraNet licensing information, please contact your local Cirrus Logic sales representative, or see www.cirrus.com for contact information.

The EV-2 Kit includes two EV-2 boards, two CM-2 CobraNet modules, one Ethernet cross-over cable and one software CD.

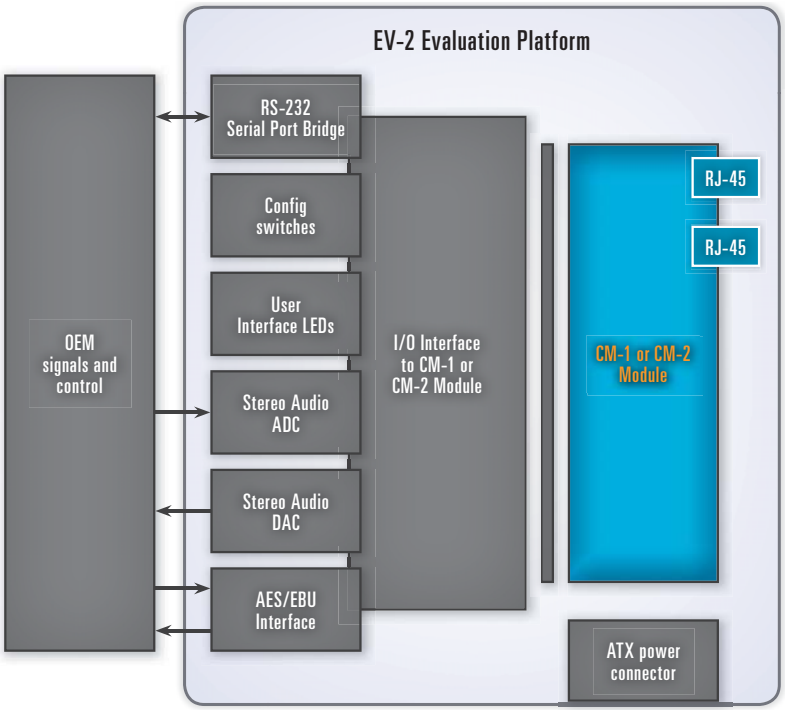

CobraCom™

CobraNet Evaluation Kit

Features

- Two pro quality, uncompressed digital audio channels in, two channels out (2x2)
  - Optional upgrade to 8x8 and 16x16 channel support
- Configurable 16, 20 and 24-bit digital audio resolutions at 48 and 96 kHz audio sample rates
- Local 32-bit audio DSP processing
  - DSP Conductor™ graphical audio signal processing development tool
- IEEE 802.3af Power-over-Ethernet (PoE) delivers 15.4 W of total power at 100 m
  - Use CobraCom Reference platform with standard, off-the-shelf PoE Ethernet switches
  - No need for custom, zone-limited matrix amplifiers
  - Higher power possible at shorter distance
- Class AB loudspeaker power amplifier delivers 6 W average, 15 W peak into 8 Ω
- Popguard® technology reduces loudspeaker output clicks and pops
- Dual, board-level electret and external mics
- 2x2 GPIO for simple user interface
- RS-232 for serial communication
- 2-layer PCB measuring 5.4" x 4"
- Optional external—48 V network power

The CobraCom Reference Design allows for easy implementation of network-powered CobraNet digital audio devices. Through real-time transport of uncompressed digital audio over ubiquitous Ethernet, CobraNet combines the routing flexibility of a network with pro quality, multichannel audio. By providing one channel of speaker level audio output, one channel of microphone input, 32-bit audio DSP, GPIO for a simple user interface, RS-232 and standard Power-over-Ethernet (PoE) power conditioning, many different networked products can be developed.

For example, CobraCom Reference platform can be used to create an integrated, multizone, high fidelity music, intercom and audio surveillance system running over standard Ethernet infrastructure, perhaps sharing the network with IP cameras. Local audio DSP can be applied to such tasks as automated background music ducking, zone equalization, hands-free intercom, ambient audio-driven security system triggering, to name only a few. Cirrus Logic's DSP Conductor software makes DSP function design a snap, with no programming required.

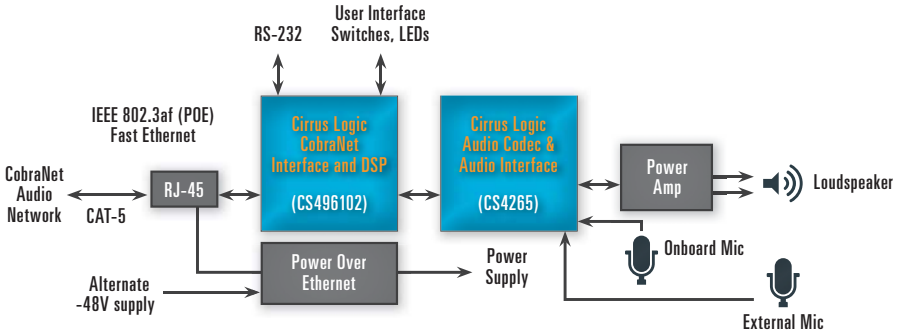

Audio A/D Converters

Part	Resolution (bits)	Dynamic Range (dB)	THD+N (dB)	Sample Rate (kHz)	Analog Inputs	Power Supply (V)	Comments	Package
CS5340	24	101	-94	192	Single-ended	VA = 3.3 or 5 VD = 3.3 or 5 VL = 1.8 to 5	Pin compatible with CS5341	16 TSSOP
CS5341	24	105	-98	192	Single-ended	VA = 3.3 or 5 VD = 3.3 or 5 VL = 1.8 to 5	Pin compatible with CS5340	16 TSSOP
CS5342	24	105	-98	192	Single-ended	VA = 3.3 or 5 VD = 3.3 or 5 VL = 2.5 to 5	384*Fs MCLK	16 TSSOP
CS5343/44	24	98	-92	96	Single-ended	VA = 3.3 or 5	CS5343–I^2S CS5344–LJ	10 TSSOP
CS5346	24	103	-95	192	Single-ended	VA = 5 VD = 3.3, VL = 3.3 to 5	6:1 input MUX, PGA, MIC pre-amp, high input impedance	48 LQFP
CS5351	24	108	-98	192	Single-ended	VA = 5 VD = 3.3 or 5 VL = 2.5 to 5	Functionally compatible with CS5361	24 SOIC 24 TSSOP
CS5361	24	114	-105	192	Differential	VA = 5 VD = 3.3 or 5 VL = 2.5 to 5	Pin compatible with CS5381	24 SOIC 24 TSSOP
CS5364/66/68	24	114	-105	192	Differential	VA = 5 VD = 3.3 or 5 VLS/VLC = 1.8 to 5	4-/6-/8-channel ADC, TDM, on-chip oscillator	48 LQFP
CS5381	24	120	-110	192	Differential	VA = 5 VD = 3.3 or 5 VL = 2.5 to 5	Flagship performance	24 SOIC 24 TSSOP

CS5340

101 dB, 192 kHz Stereo A/D Converter

Features

- Advanced multibit Delta-Sigma architecture
- 24-bit conversion
- Supports all audio sample rates including 192 kHz
- 101 dB dynamic range at 5 V
- -94 dB THD+N
- High-pass filter to remove DC offsets
- Low-latency digital filter
- 90 mW power consumption at 3.3 V
- Analog/digital core supplies from 3.3 V to 5 V
- Supports logic levels between 1.8 V and 5 V
- Auto-mode selection
- Pin compatible with CS5341
- Consumer and automotive grades
- Package: 16-pin TSSOP, lead-free assembly

Applications

- Automotive Applications
- Blu-ray/DVD Recorders
- Effects Processors
- Home Theater
- Karaoke Systems
- Set-Top Boxes

The CS5340 is a complete A/D converter for digital audio systems. It performs sampling, A/D conversion and decimation filtering, generating 24-bit values for both left and right inputs in serial form at sample rates up to 200 kHz per channel.

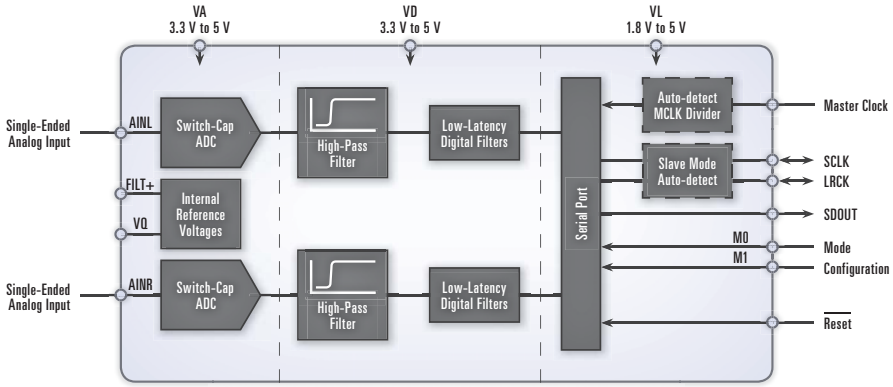

CS5341/42

105 dB, 192 kHz Stereo A/D Converters

Features

- Advanced multibit Delta-Sigma architecture
- 24-bit conversion
- Supports all audio sample rates including 192 kHz
- 105 dB dynamic range at 5 V
- -98 dB THD+N
- High-pass filter to remove DC offsets
- Low-latency digital filter
- 90 mW power consumption at 3.3 V
- Analog/digital core supplies from 3.3 V to 5 V
- Supports logic levels between 1.8 V and 5 V (CS5341) and between 2.5 V and 5 V (CS5342)
- Auto-mode selection
- 384*Fs MCLK (CS5342)
- Package: 16-pin TSSOP, lead-free assembly

Applications

- Audio/Video Receivers
- Automotive Entertainment Applications
- Blu-ray/DVD Recorders
- Digital Mixing Consoles
- Effects Processors
- Home Theater

The CS5341 and CS5342 are complete A/D converters for digital audio systems. They perform sampling, A/D conversion and decimation filtering, generating 24-bit values for both left and right inputs in serial form at sample rates up to 200 kHz per channel.

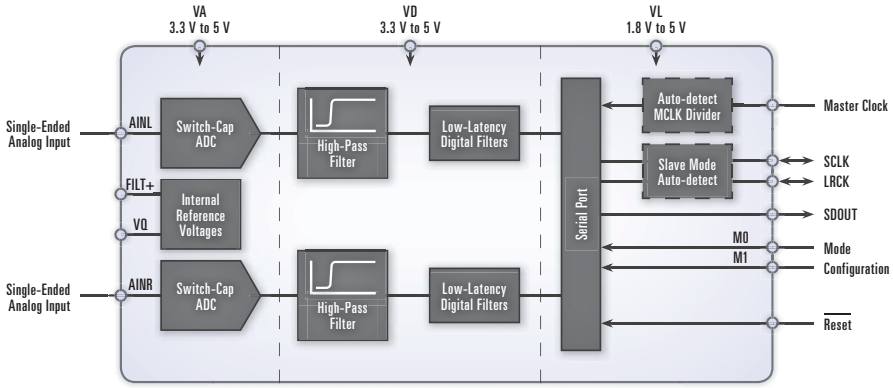

CS5343/44

98 dB, 96 kHz Stereo A/D Converters

Features

- Advanced multibit Delta-Sigma architecture
- 24-bit conversion
- Supports all audio sample rates up to 108 kHz
- 98 dB dynamic range at 5 V
- -92 dB THD+N
- Low-latency digital filter
- High-pass filter to remove DC offsets
- Single +3.3 V or +5 V power supply
- 36 mW power consumption at 3.3 V
- Auto-mode sample-rate selection
- 256x or 384x MCLK/LRCK ratio
- CS5343 supports I²S audio format
- CS5344 supports LJ audio format
- Master or slave operation
- Consumer and automotive grades
- 10-pin TSSOP package, lead-free assembly

Applications

- A/V Receivers
- Automotive Applications
- Blu-ray/DVD Recorders
- Effects Processors
- Karaoke Systems
- Set-Top Boxes

The CS5343/4 is a cost-effective complete A/D converter for digital audio systems. It performs sampling, A/D conversion and decimation filtering, generating 24-bit values for both left and right inputs in serial form at sample rates up to 108 kHz per channel.

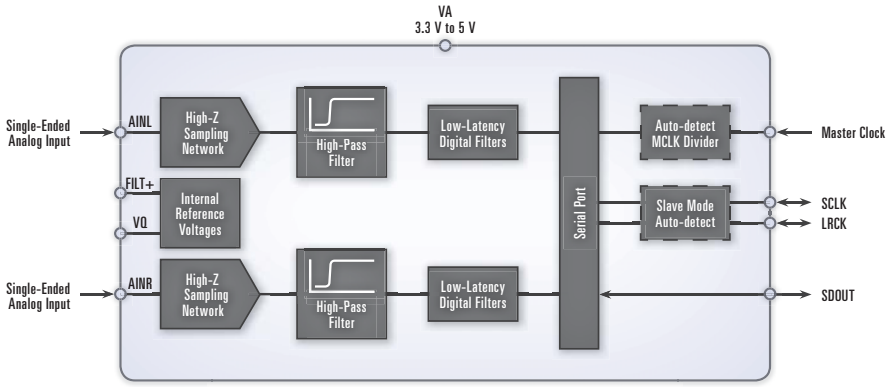

CS5346

103 dB, 192 kHz Stereo A/D Converter with MUX and PGA

Features

- Advanced multibit Delta-Sigma architecture
- Complete stereo A/D converter
- 24-bit conversion
- System sampling rates up to 192 kHz
- 103 dB dynamic range
- -95 dB THD+N
- 6:1 stereo input MUX
- Microphone pre-amp with 32 dB gain and low-noise bias supply
- Single-ended inputs
- 5 V analog; 3.3 V digital power supply
- Support for direct interface to logic levels from 3.3 V to 5 V
- High-pass filter with defeat
- Package: 48-pin LQFP, lead-free assembly
- Consumer and automotive grade

Applications

- A/V Receivers
- Automotive Entertainment Applications
- Blu-ray/DVD Recorders
- DVD Recorders
- Digital TVs
- Set-Top Boxes

The CS5346 is a highly integrated A/D converter with a 6:1 stereo input MUX. The microphone path includes a MIC pre-amp with 32 dB gain and a PGA is available for line or microphone inputs providing gain or attenuation of ±12 dB. With its updated architecture, the CS5346 is ideal for cost sensitive consumer and automotive applications requiring high input impedance.

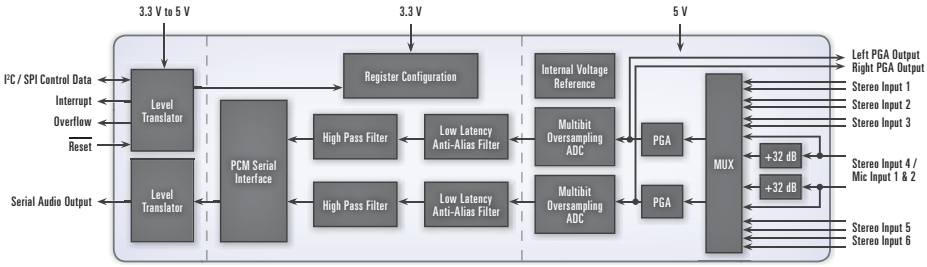

CS5351

108 dB, 192 kHz Stereo A/D Converter

Features

- Advanced multibit Delta-Sigma architecture
- 24-bit conversion
- System sampling rates up to 192 kHz
  - DVD-Audio-compatible
- 108 dB dynamic range
- -98 dB THD+N
- Low-latency digital filter
- High-pass filter and DC offset calibration
- Single-ended analog architecture
- Supports master or slave mode operation
- Supports logic levels between 2.5 V and 5 V
- 135 mW power consumption
- 3.3 V or 5 V digital power supply
- 5 V analog power supply
- Functionally compatible with CS5361
- Package: 24-pin TSSOP, 24-pin SOIC, lead-free assembly

Applications

- Audio Interfaces
- Audio/Video Receivers
- Automotive Entertainment Systems
- Digital Mixing Consoles
- Effects Processors
- Musical Instruments

The CS5351 is a complete A/D converter for digital audio systems. It performs sampling, A/D conversion and decimation filtering, generating 24-bit values for both left and right inputs in serial form at sample rates up to 192 kHz per channel.

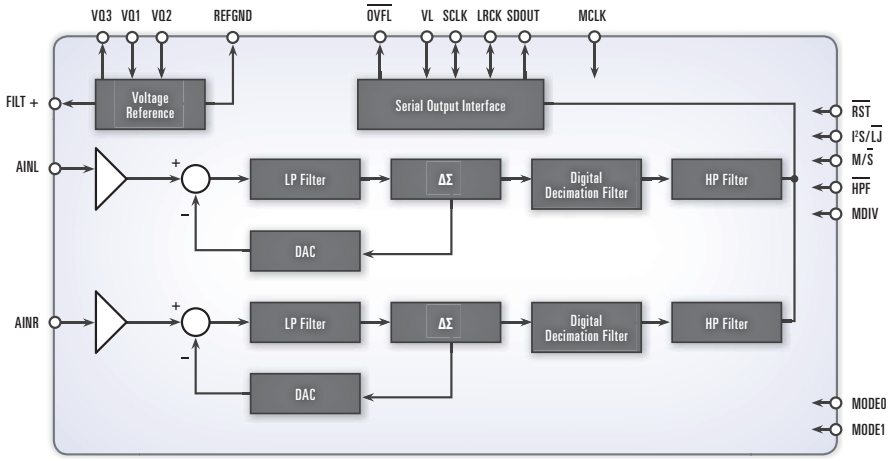

CS5361

114 dB, 192 kHz Stereo A/D Converter

Features

- Advanced multibit Delta-Sigma architecture
- 24-bit conversion
- System sampling rates up to 192 kHz
  - DVD-Audio-compatible
- 114 dB dynamic range
- -105 dB THD+N
- Low-latency digital filter
- High-pass filter and DC offset calibration
- Differential analog architecture
- Supports master or slave mode operation
- Pin compatible with the CS5381
- Supports logic levels between 2.5 V and 5 V
- 135 mW power consumption
- 3.3 V to 5 V digital power supply
- 5 V analog power supply functionally compatible with CS5351
- Consumer and automotive grades
- Package: 24-pin TSSOP, 24-pin SOIC, lead-free assembly

Applications

- Audio/Video Receivers
- Automotive Entertainment Systems
- Broadcast Equipment
- Digital Mixing Consoles
- Effects Processors
- Home Theater

The CS5361 is a complete A/D converter for digital audio systems. It performs sampling, A/D conversion and decimation filtering, generating 24-bit values for both left and right inputs in serial form at sample rates up to 192 kHz per channel.

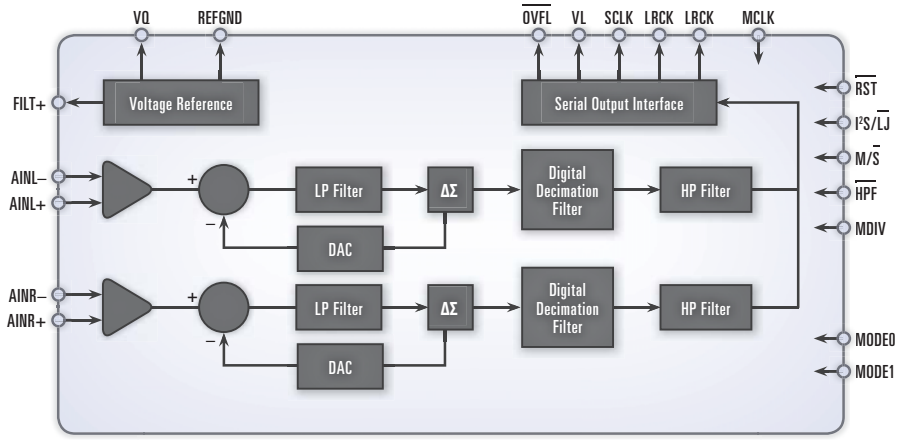

CS5364/66/68

114 dB, 192 kHz 4-, 6- and 8-Channel A/D Converters

Features

- Multibit Delta-Sigma architecture
- 24-bit conversion
- System sampling rates up to 192 kHz
- 114 dB dynamic range
- -105 dB THD+N
- Selectable audio interface formats
  - Left-justified, I^2S, TDM
  - 8-channel TDM interface formats
- Low-latency digital filters
- On-chip oscillator driver
- 5 V analog power supply
- 3.3-5 V digital power supply
- Supports logic levels between 1.8 V and 5 V for control and serial ports
- Less than 600 mW power consumption
- High-pass filter for DC offset calibration
- Differential analog architecture
- Supports master or slave mode
- Overflow detection
- Consumer and automotive grades
- Lead-free 48-pin LQFP, 8-, 6- and 4-channel pin-compatible family

Applications

- Audio Interfaces
- Audio/Video Receivers
- Automotive Amplifiers
- Digital Mixing Consoles
- Effects Processors
- Multitrack Recorders

The CS536X Family of premium-performance audio A/D converters are designed for today's demanding surround-sound consumer and multichannel pro audio applications. The highly integrated IC provides designers with a space-saving solution that streamlines product development, reduces design complexity and lowers overall system costs compared to boards that use multiple stereo A/D converters for surround sound or multichannel designs.

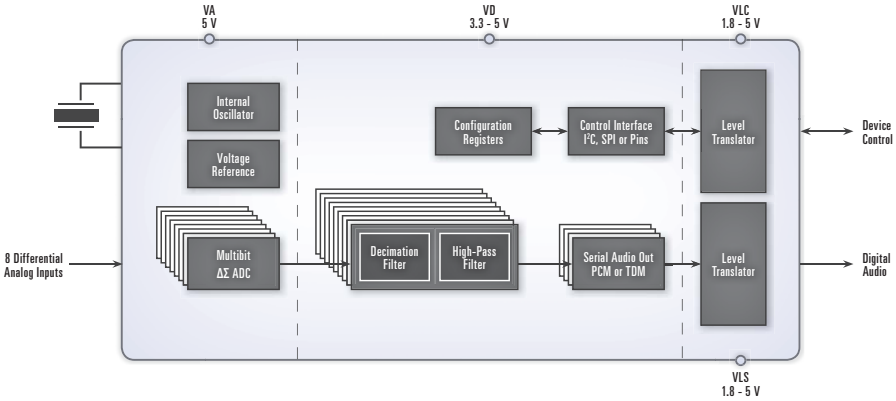

CS5381

120 dB, 192 kHz Stereo A/D Converter

Features

- Advanced multibit Delta-Sigma architecture
- 24-bit conversion
- System sampling rates up to 192 kHz
  - DVD-Audio-compatible
- 120 dB dynamic range
- -110 dB THD+N
- Low-latency digital filter
- High-pass filter or DC offset calibration
- Differential analog architecture
- Supports master or slave mode operation
- Pin compatible with the CS5361
- Supports logic levels between 2.5 V and 5 V
- 260 mW power consumption
- 3.3 V to 5 V digital power supply
- 5 V analog power supply
- Package: 24-pin SOIC, 24-pin TSSOP, lead-free assembly

Applications

- Audio/Video Receivers
- Digital Mixing Consoles
- Effects Processors
- Multitrack Recording Systems

The CS5381 is a complete A/D converter for digital audio systems. It performs sampling, A/D conversion and decimation filtering, generating 24-bit values for both left and right inputs in serial form at sample rates up to 200 kHz per channel.

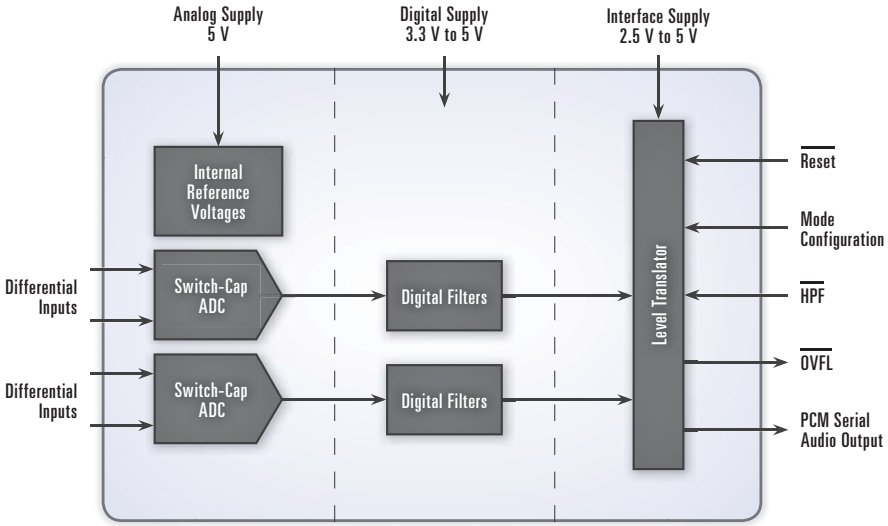

Audio D/A Converters

Part	Channels	Resolution (bits)	Dynamic Range (dB)	THD+N (dB)	Sample Rate (kHz)	Analog Outputs	Power Supply (V)	Comments	Package
CS4334/35/38/39	2	24	96	-88	96	Single-ended	VA = 5	Entry-level stereo DAC	8 SOIC
CS4344/45/48	2	24	105	-90	192	Single-ended	VA = 3.3 or 5	Upgrade for CS4340 and CS4340A	10 TSSOP
CS4349	2	24	101	-91	192	Single-ended	VA = 3.3 or 5	1 V_{RMS} @ 3.3 V, TDM, Volume Control	24 TSSOP
CS4350	2	24	109	-91	192	Single-ended or Differential	VA = 3.3 or 5 VLC = 3.3 to 5 VLS = 1.5 to 5	Integrated PLL, TDM	24 TSSOP
CS4351	2	24	112	-100	192	Single-ended	VA = 9 or 12 VD = 3.3 VL = 1.8 to 3	Line driver, 2 V_{RMS} output	20 TSSOP
CS4352	2	24	106	-93	192	Single-ended	VA = 9 or 12 VD = 3.3 VL = 1.5 to 5	Line driver, 2 V_{RMS} output	20 TSSOP
CS4353	2	24	106	-93	192	Single-ended	VA/VD = 3.3 VCP = 3.3 VL = 0.9 to 3.3	Ground-centered 2 V_{RMS} line-level outputs	24 QFN
CS4354	2	24	101	-86	192	Single-ended	VA/VD = 5.0 VL = 1.5 to 5.0	2 V_{RMS} line drivers	14 SOIC
CS4361	6	24	105	-95	192	Single-ended	VA = 5 VL = 1.8 to 5	Entry-level 6-channel DAC	20 TSSOP
CS4362A/82A	6/8	24	114	-100	192	Differential	VA = 5 VD = 2.5 VL = 1.8 to 5	6-/8-channel DAC, DSD	48 LQFP
CS4364/84	6/8	24	103	-88	192	Single-ended	VA = 5 VD = 2.5 VL = 1.8 to 5	6-/8-channel DAC, DSD, footprint-compatible with CS4365/85	48 LQFP
CS4365/85	6/8	24	114	-100	192	Differential	VA = 5 VD = 2.5 VL = 1.8 to 5	6-/8-channel DAC, DSD, TDM	48 LQFP
CS4385A	8	24	114	-100	192	Differential	VA = 5 VD = 2.5 VL = 1.8 to 5	8-channel DAC, DSD, TDM. Unlike the CS4385, the CS4385A offers access to TDM through hardware mode and offers a wider range of TDM timings	48 LQFP
CS4392	2	24	114	-100	192	Differential	VA = 5 VL = 1.8 to 5	DSD, selectable digital filters, pin compatible with CS4391A	20 TSSOP
CS4398	2	24	120	-107	192	Differential	VA = 5 VD = 3.3 or 5 VL = 1.8 to 5	Flagship DAC, DSD processor, selectable D-filter	28 TSSOP

CS4334/35/38/39

8-Pin, 24-bit, 96 kHz Stereo D/A Converters

Features

- Complete stereo D/A converter system: interpolation, D/A, output analog filtering
- 24-bit conversion
- 96 dB dynamic range
- -88 dB THD+N
- Low-clock-jitter sensitivity
- Filtered line-level outputs
- On-chip digital de-emphasis
- Popguard technology for control of clicks and pops
- Single 5 V power supply
- Consumer and automotive grades
- Package: 8-pin plastic SOIC, lead-free assembly

Applications

- Automotive Entertainment Systems
- Blu-ray/DVD Players
- Home Theater
- Set-Top Boxes

The CS4334/35/38/39 Family of products are complete stereo D/A converter output systems including interpolation, 1-bit D/A conversion and output analog filtering in an 8-pin package. The CS4334/35/38/39 products support all major audio data interface formats, and the individual devices differ only in the supported interface format.

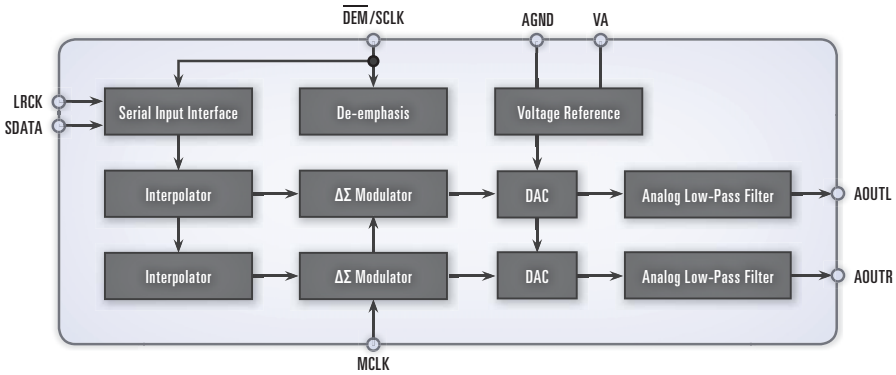

CS4344/45/48

105 dB, 10-pin, 24-bit, 192 kHz Stereo D/A Converters

Features

- Advanced multibit Delta-Sigma architecture
- 105 dB dynamic range
- -90 dB THD+N
- 24-bit conversion
- Automatic detection of sample rates up to 192 kHz
- Single 3.3 V or 5 V power supply
- Single-ended outputs
- Popguard technology
- Low-clock-jitter sensitivity
- On-chip digital de-emphasis
- Support for all standard audio interface formats
- Consumer and automotive grades
- Package: 10-pin TSSOP, lead-free assembly

Applications

- Automotive Entertainment Systems
- Blu-ray/DVD Players
- Digital TVs
- Home Theater
- Set-Top Boxes

The CS4344 Family are complete stereo D/A converter output systems including interpolation, multibit D/A conversion and output analog filtering in a 10-pin package. The CS4344/5/6/8 supports all major audio data interface formats, and the individual devices differ only in the supported interface format.

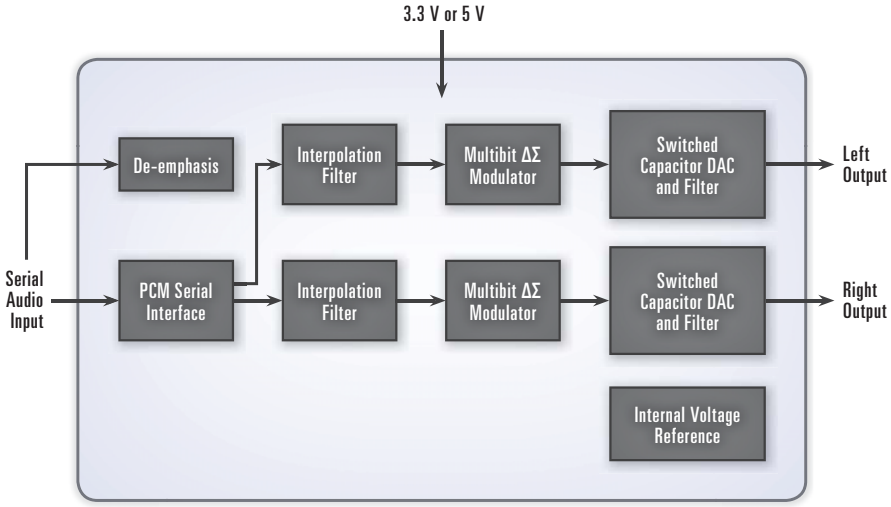

CS4349

192 kHz Stereo DAC with Volume Control and 1 V_{RMS} Single-ended Outputs at 3.3 V

Features

- Advanced multibit Delta-Sigma architecture
- 101 dB dynamic range
- -91 dB THD+N at 5.0 V
- -84 dB THD+N at 3.3 V
- 24-bit conversion
- Supports audio sample rates up to 192 kHz
- Low-latency digital filtering
- Single-ended analog output architecture
- Automatic sample-rate range detection
- Popguard technology for control of clicks and pops
  - Popguard technology disable function for fast startups
- Supports all standard serial audio formats including time-division multiplexed (TDM)
- +3.3 V or +5.0 V analog supply
- +1.5 V to +5.0 V logic supplies for serial port
- +3.3 V to +5.0 V control port interface

Applications

- A/V Receivers
- Audio Interfaces
- Blu-ray/DVD Players/ Recorders
- Digital TVs
- Mixing Consoles
- Musical Instruments
- Set-Top Boxes

The CS4349, an upgrade of the CS4341 and CS4341A, is a stereo D/A converter based on an advanced multibit Delta-Sigma architecture with integrated volume control and 1 V_{RMS} single-ended output drive capability at 3.3 V.

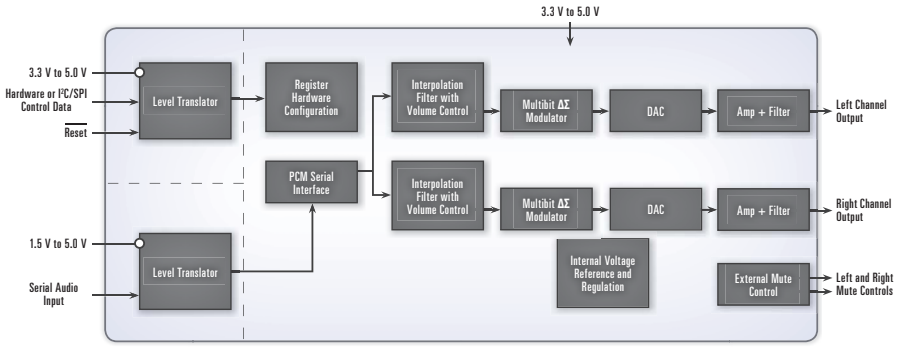

CS4350

109 dB, 24-bit, 192 kHz Stereo D/A with Integrated PLL

Features

- Advanced multibit Delta-Sigma modulator
- 109 dB dynamic range, - 91 dB THD+N
- 24-bit/192 kHz sample rates with automatic sample rate detection
- Single-ended or differential analog output architecture
- Integrated PLL locks to incoming left-right clock—no MCLK required
- Single 3.3 or 5 V power supply, supports logic levels from +1.5 V to +5 V
- Popguard technology for control of clicks and pops
- Supports all standard serial audio formats including time-division multiplexed (TDM)
- 24-pin TSSOP, lead free package

Applications

- A/V Receivers
- Blu-ray/DVD Players
- DVRs
- Digital TVs
- Musical Instruments
- Professional Audio Equipment
- Set-Top Boxes

The CS4350 is a complete stereo digital-to-analog system with on-chip Phase-Locked-Loop (PLL) based master clock derivation. The integrated PLL locks to the incoming Left-Right clock eliminating the need for external master clock line routing. The CS4350 includes digital interpolation, 5th-order multibit Delta-Sigma digital-to-analog conversion, digital de-emphasis, volume control, channel mixing and analog filtering with high tolerance to clock jitter and a minimal set of external components.

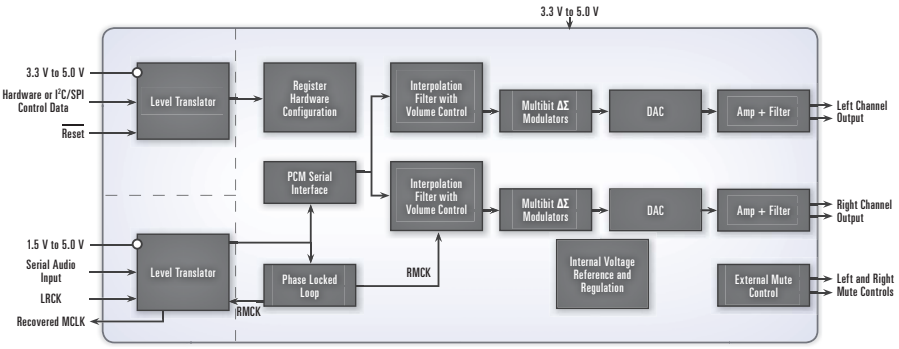

CS4351

112 dB, 24-bit, 192 kHz Stereo D/A Converter with Line Driver

Features

- Advanced multibit Delta-Sigma architecture
- 24-bit conversion
- Up to 192 kHz sample rates
- 112 dB dynamic range
- -100 dB THD+N
- Integrated line driver
  - 2 V_{RMS} output into 5 kh AC load
- Digital volume control with soft ramp
  - 119 dB attenuation
  - 0.5 dB step size
  - Zero crossing click-free transitions
- Automatic sample-rate detection
- ATAPI mixing
- Low-clock-jitter sensitivity
- Popguard technology for control of clicks and pops
- 9 V or 12 V analog power supply
- 3.3 V digital power supply
- Direct interface with 1.8 V to 3.3 V logic
- Consumer and automotive grades
- Package: 20-pin TSSOP, lead-free assembly

Applications

- A/V Receivers
- Blu-ray/DVD Players/ Recorders
- Digital TVs
- Mini-Component Systems
- Set-Top Boxes

The CS4351 is a complete stereo D/A converter system including digital interpolation, fifth-order multibit Delta-Sigma D/A conversion, digital de-emphasis, volume control, channel mixing, analog filtering and integrated line-level driver.

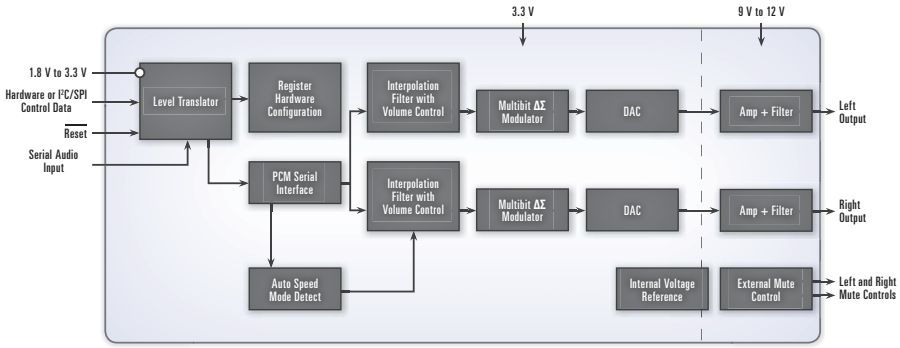

CS4352

106 dB, 24-bit, 192 kHz Stereo D/A Converter with Line Driver

Features

- Advanced multibit Delta-Sigma modulator
- 106 dB dynamic range
- -93 dB THD+N
- 24-bit/192 kHz sample rates
- Integrated line driver
- 2 V_{RMS} output into 5 kh AC load
- Compliant with consumer line level and SCART output
- Low latency digital filtering
- +9 to +12 V analog power supply, +3.3 V digital power supply
- Supports direct interface to logic levels from +1.5 V to +3.3 V
- Compliant with the Cell Broadband Engine® (Cell processor)
- Single-ended outputs
- Popguard technology for control of clicks and pops
- Automatic sample rate detection
- Supports standard PCM audio format
- 20-pin TSSOP, lead free available

Applications

- A/V Receivers
- Automotive Video System
- Blu-ray/DVD Players/ Recorders
- Digital TVs
- Digital Mixing Consoles
- Effects Processors
- Outboard Converters
- Personal Video Recorders (PVRs)
- Set-Top Boxes
- Video Game Consoles

The CS4352 is high-performance stereo D/A converter for consumer electronics, professional and automotive audio applications. This low profile 20-pin, 106 dB D/A converter is a pin-compatible, hardware mode only, cost efficient version of the popular CS4351 stereo D/A converter.

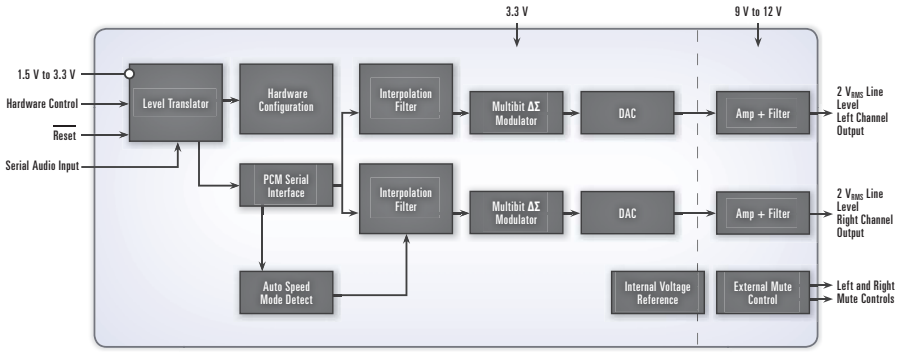

CS4353

106 dB, 192 kHz Stereo D/A Converter with 2 V_{RMS} Line Output

Features

- Advanced multibit Delta-Sigma architecture
- 106 dB (A-wt) dynamic range
- -93 dB THD+N
- Single-ended ground centered analog architecture
  - No DC-blocking capacitors required
  - Integrated step-up/Inverting charge pump
  - Filtered line-level outputs
  - Selectable 1 or 2 V_{RMS} fullscale output
- Low clock-jitter sensitivity
- Low-latency digital filtering
- Supports ample rates up to 192 kHz
- 24-bit resolution
- Power supplies
  - +3.3 V charge pump and core logic
  - +3.3 V analog
  - +0.9 to 3.3 V interface
- 24-pin QFN, lead-free assembly
- Commercial and Automotive Grades

Applications

- A/V Receivers
- Automotive Entertainment Systems
- Blu-ray/DVD Players/ Receivers
- DVD Players/Recorders
- Digital TVs
- Mixing Consoles
- Set-Top Boxes
- Video Game Consoles

The CS4353 is a 24-bit, 192 kHz stereo audio D/A converter with an on-chip 2 V_{RMS} line driver working from a single 3.3 V power supply. The CS4353 is ideal for any application that requires a line-level output, such as DTVs, Blu-ray Disc players, set-top boxes, and video game consoles.

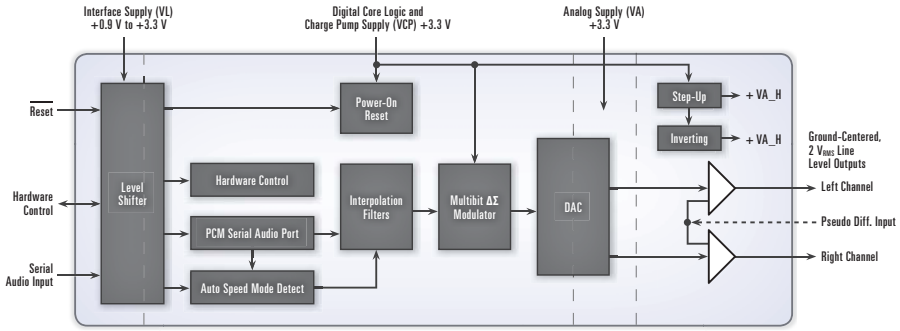

CS4354

5 V Stereo DAC with 2 V_{RMS} Ground-centered outputs

Features

- Multibit delta-sigma modulator
- 101 dB A-wt dynamic range
- -86 dB THD+N
- Single-ended ground centered analog architecture
  - No DC-blocking capacitors required
  - Integrated step-up/Inverting charge pump
  - Filtered line-level outputs
- Low clock-jitter sensitivity
- Low-latency digital filtering
- Supports sample rates up to 192 kHz
- 24-bit resolution
- Power supplies
  - +5 V analog
  - +1.5 to 5 V interface
- 50mW power consumption
- 14-pin SOIC, lead-free assembly

Applications

- Blu-ray/DVD Players/ Recorders
- Digital TVs
- Set-Top boxes
- Video Game Consoles

The CS4354 is an audio stereo D/A converter with an on-chip 2 V_{RMS} line driver working from a single 5 V power supply. It features digital interpolation, fifth order multibit Delta Sigma digital-to-analog conversion, digital de-emphasis and analog filtering.

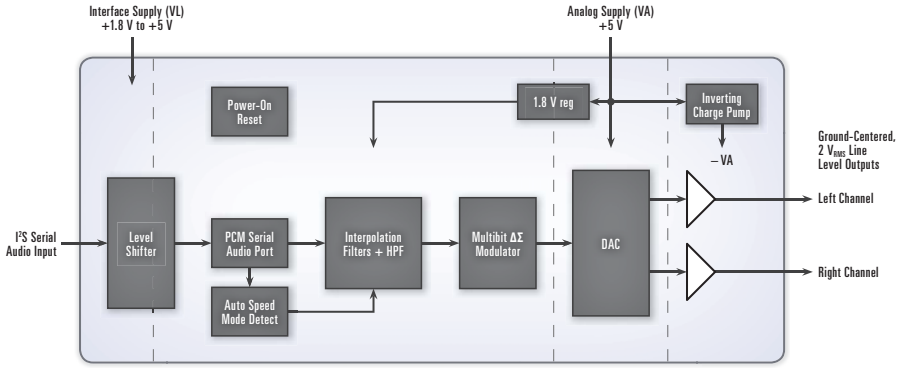

CS4361

105 dB, 24-bit, 192 kHz, 6-Channel D/A Converter

Features

- Advanced multibit Delta-Sigma architecture
- 24-bit conversion
- 105 dB dynamic range
- -95 dB THD+N
- Up to 192 kHz sample rates for DVD-Audio equipment
- 5 V analog and digital power supply
- 1.8 V to 5 V interface power
- Single-ended outputs
- Mute control output
- Filtered line-level outputs
- On-chip digital de-emphasis
- Popguard technology for control of clicks and pops
- Low-clock-jitter sensitivity
- Available in a 20-pin TSSOP, lead-free assembly

Applications

- Blu-ray/DVD Players/ Recorders
- Digital TVs
- Home Theater
- Set-Top Boxes

The CS4361 is a complete 6-channel D/A converter that includes interpolation, multibit D/A conversion and output analog filtering in a compact, 20-pin package. The CS4361 supports all major data interface formats.

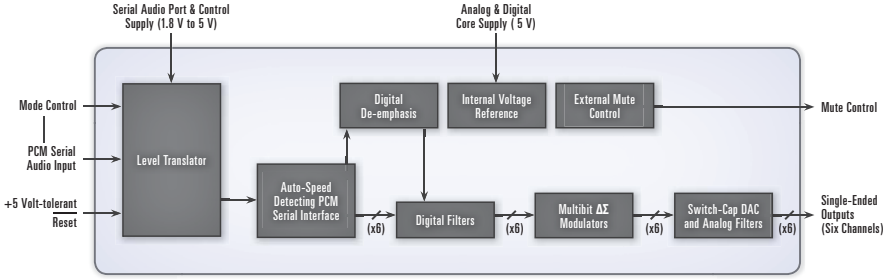

CS4362A/82A

114 dB, 24-bit, 192 kHz, 6- and 8-Channel D/A Converters with DSD Support and Low-Latency Digital Filtering

Features

- Advanced multibit Delta-Sigma architecture
- 24-bit conversion
- 114 dB dynamic range
- -100 dB THD+N
- Up to 192 kHz sample rates for DVD-Audio equipment
- Selectable low-latency digital filters
- Direct Stream Digital® mode (SACD)
  - On-chip 50 kHz filter
  - Dedicated inputs
- Volume control with soft ramp
  - 1 dB step size
  - Zero crossing click-free transitions
- Low-clock-jitter sensitivity
- µC or standalone operation
- Six mute output pins (CS4362A)
- Two mute output pins (CS4382A)
- Pin-compatible devices for easy upgrade path
- Consumer and automotive grades
- Available in a 48-pin LQFP, lead-free assembly

Applications

- A/V Receivers
- Automotive Entertainment Systems
- Blu-ray/DVD Players
- Effects Processors
- Mixing Consoles

The CS4362A/82A are pin-compatible 6- and 8-channel D/A converters. They feature digital de-emphasis, one-dB step size volume control, ATAPI channel mixing, selectable fast and slow digital interpolation filters followed by an oversampled, multibit Delta-Sigma modulator which includes mismatch shaping technology that eliminates distortion due to capacitor mismatch.

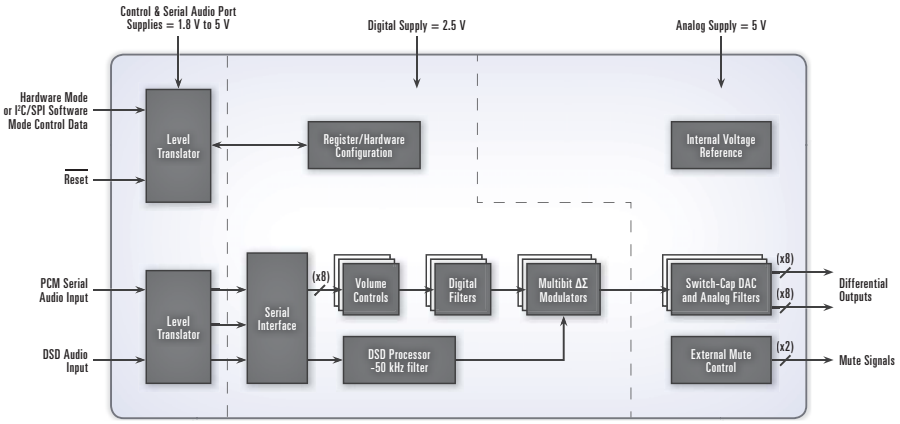

CS4364/84

24-bit, 6- and 8-Channel D/A Converters with DSD Support, Low-Latency Digital Filtering, TDM Interface and Single-ended Output Architecture

Features

- Advanced multibit Delta-Sigma architecture
- 24-bit conversion
- 103 dB dynamic range
- -88 dB THD+N
- Single-ended output architecture
- Up to 192 kHz sample rates for DVD-Audio equipment
- Direct Stream Digital® mode (SACD)
  - Non-decimating volume control
  - On-chip 50 kHz filter
  - Dedicated inputs
- Supports industry-standard TDM interface
- Selectable low-latency digital filters
- Volume control with soft ramp
  - 0.5 dB step size
  - Zero crossing click-free transitions
- Low-clock-jitter sensitivity
- µC or standalone operation
- 6 mute output pins (CS4364)
- 2 mute output pins (CS4384)
- Pin-compatible devices for easy upgrade path
- Available in a 48-pin LQFP, lead-free assembly

Applications

- A/V Receivers
- Automotive Entertainment Systems
- Digital TVs
- Effective Processors
- Mixing Consoles
- Sound Cards

The CS4364/84 are pin-compatible 6- and 8-channel D/A converters. They feature digital de-emphasis, half-dB step-size volume control, ATAPI channel-mixing, selectable fast and slow digital interpolation filters followed by an oversampled, multibit Delta-Sigma modulator which includes mismatch shaping technology that eliminates distortion due to capacitor mismatch.

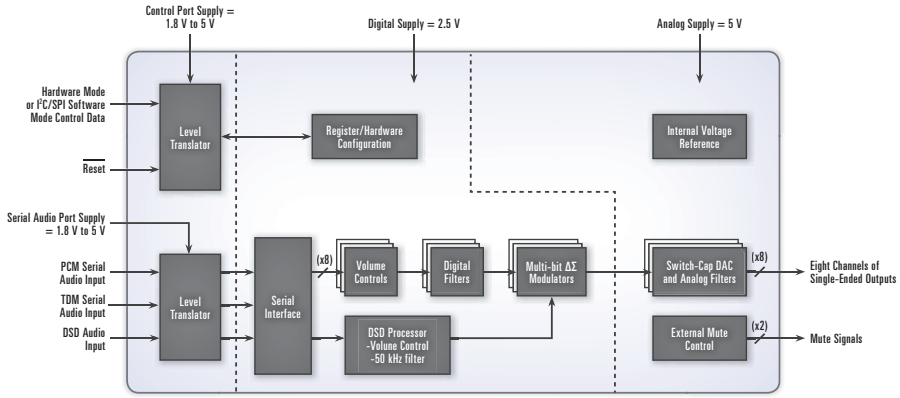

CS4365/85

114 dB, 24-bit, 192 kHz, 6- and 8-Channel D/A Converters with DSD Support, Low-Latency Digital Filtering and TDM Interface

Features

- Advanced multibit Delta-Sigma architecture
- 24-bit conversion
- 114 dB dynamic range
- -100 dB THD+N
- Up to 192 kHz sample rates for DVD-Audio equipment
- Selectable low-latency digital filters
- Direct Stream Digital® mode (SACD)
  - On-chip 50 kHz filter
  - Dedicated inputs
- Volume control with soft ramp
  - 1 dB step size
  - Zero crossing click-free transitions
- Low-clock-jitter sensitivity
- µC or standalone operation
- Six mute output pins (CS4362A)
- Two mute output pins (CS4382A)
- Pin-compatible devices for easy upgrade path
- Consumer and automotive grades
- Available in a 48-pin LQFP, lead-free assembly

Applications

- A/V Receivers
- Automotive Entertainment Systems
- Digital TVs
- Effects Processors
- Mixing Consoles
- Sound Cards

The CS4365/85 are pin-compatible 6- and 8-channel D/A converters. They feature digital de-emphasis, half-dB step-size volume control, ATAPI channel-mixing, selectable fast and slow digital interpolation filters followed by an oversampled, multibit Delta-Sigma modulator which includes mismatch shaping technology that eliminates distortion due to capacitor mismatch.

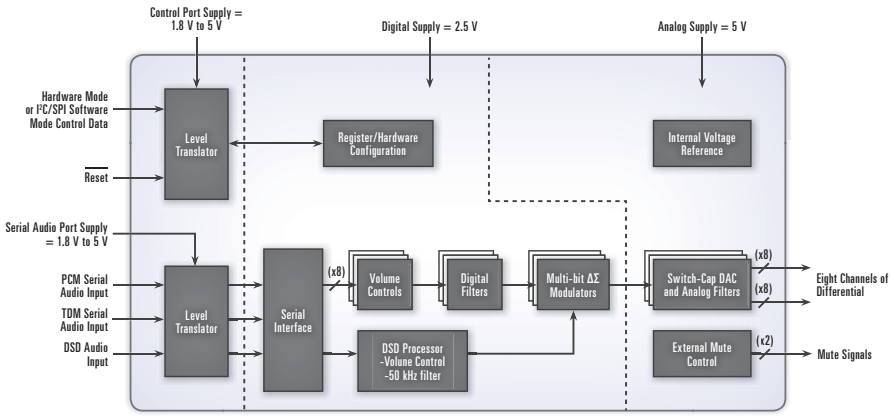

CS4385A

114 dB, 192 kHz 8-Channel D/A Converter

Features

- Advanced Multibit Delta Sigma Architecture
- 24-bit Conversion
- Automatic Detection of Sample Rates up to 192 kHz
- 114 dB Dynamic Range
- -100 dB THD+N
- Direct Stream Digital® (DSD) Mode
  - Non-decimating Volume Control
  - On-chip 50 kHz Filter
  - Matched PCM and DSD Analog Output Levels
- Compatible with Industry-standard Time Division Multiplexed (TDM) Serial Interface in both Hardware and Software Modes
- Selectable Digital Filters
- Volume Control with 1/2 dB Step Size and Soft Ramp
- Low Clock-jitter Sensitivity
- +5 V Analog Supply, +2.5 V Digital Supply
- Separate 1.8 to 5 V Logic Supplies for the Control & Serial Ports

The CS4385A is a complete 8-channel digital-to-analog system. This D/A system includes digital de-emphasis, half-dB step size volume control, ATAPI channel mixing, selectable fast and slow digital interpolation filters followed by an oversampled, multibit delta sigma modulator which includes mismatch-shaping technology that eliminates distortion due to capacitor mismatch. Following this stage is a multi-element switched capacitor stage and low-pass filter with differential analog outputs.

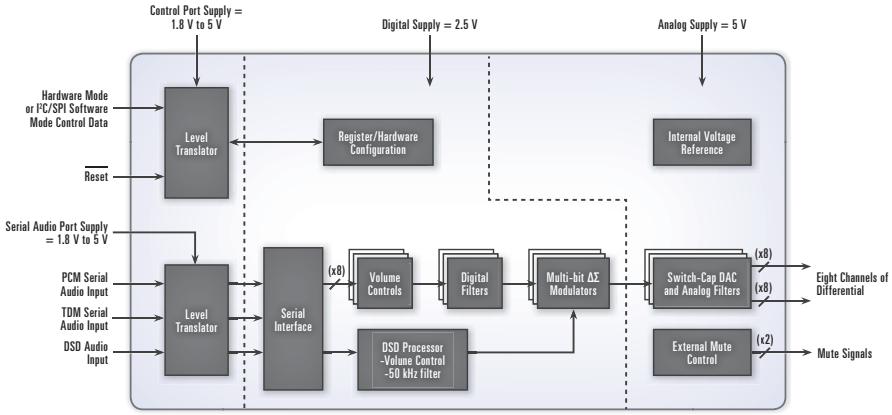

CS4392

114 dB, 24-bit, 192 kHz Stereo D/A Converter with DSD Support

Features

- Complete stereo D/A converter system: interpolation, D/A, output analog filtering
- 114 dB dynamic range
- -100 dB THD+N
- Up to 192 kHz sample rates
- Direct Stream Digital® mode (SACD)
- Low-clock-jitter sensitivity
- Selectable digital filters
  - Fast and slow roll-off
- Volume control with soft ramp
  - 1 dB step size
  - Zero crossing click-free transitions
- ATAPI mixing functions
- Direct interface with 1.8 V to 5 V logic
- Single 5 V power supply
- Pin compatible with the CS4391A
- Package: 20-pin TSSOP, lead-free assembly

Applications

- A/V Receivers
- Blu-ray/DVD Players
- Professional Audio Systems

The CS4392 is a complete stereo D/A converter system including digital interpolation, fifth-order Delta-Sigma D/A conversion, digital de-emphasis, volume control, channel mixing and analog filtering. The advantages of this architecture include: ideal differential linearity, no distortion mechanisms due to resistor matching errors, no linearity drift over time and temperature and a high tolerance to clock jitter.

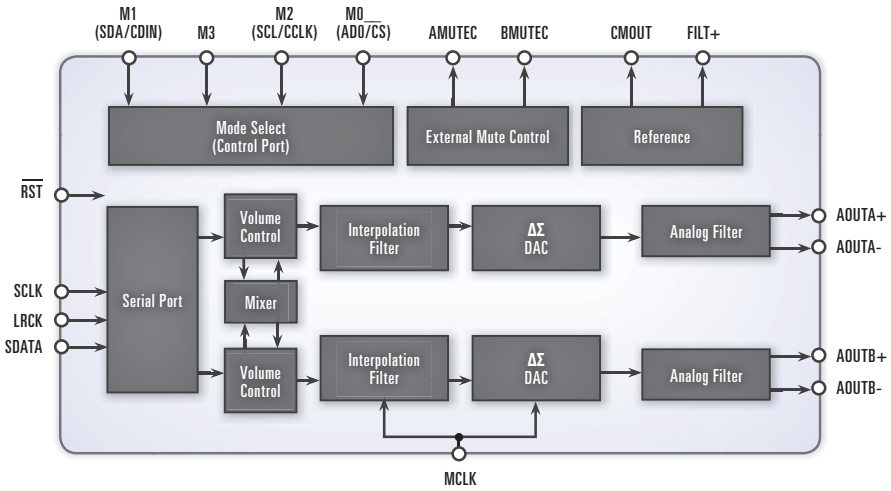

CS4398

120 dB, 24-bit, 192 kHz Stereo D/A Converter with DSD Support

Features

- Advanced multibit Delta-Sigma architecture
- 120 dB dynamic range
- -107 dB THD+N
- Up to 192 kHz sample rates
- Low-latency digital filter
- Direct Stream Digital® mode (SACD)
  - Non-decimating volume control
  - On-chip 50 kHz filter
  - Dedicated input pins
- Low-clock-jitter sensitivity
- Differential analog outputs
- 5 V analog power supply
- 3.3 V or 5 V digital power supply
- Supports direct interface to logic levels from 1.8 V to 5 V
- Control output for external muting
- Package: 28-pin TSSOP, lead-free assembly

Applications

- A/V Receivers
- Blu-ray/DVD Players
- Digital Mixing Consoles
- Effects Processors
- Outboard Converter Systems

The CS4398 is a complete stereo 24-bit/192 kHz D/A converter system. This D/A system includes digital de-emphasis, half dB step-size volume control, ATAPI channel mixing, selectable fast and slow roll off digital interpolation filters followed by an oversampled multibit Delta-Sigma modulator, which includes mismatch shaping technology that eliminates distortion due to capacitor mismatch.

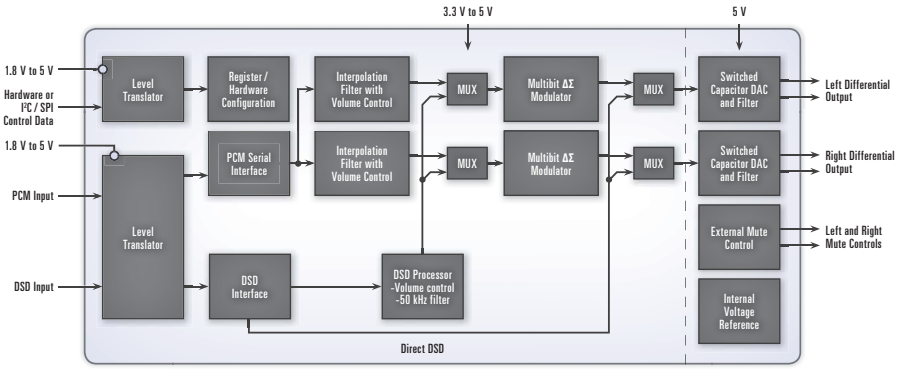

Specifications

Stereo Codecs

Part	Resolution (bits)	Dynamic Range (dB)	THD+N (dB)	Sample Rate (kHz)	Analog I/O	Power Supply (V)	Comments	Package
CS4245	24	104 ADC 104 DAC	-95 ADC -90 DAC	192	Single-ended	VA = 3.3 or 5 VD = 3.3 or 5 VL = 1.8 to 5	6:1 input MUX, MIC pre-amp, PGA	48 LQFP
CS4265	24	104 ADC 104 DAC	-95 ADC -90 DAC	192	Single-ended	VA = 3.3 or 5 VD = 3.3 or 5 VL = 1.8 to 5	2:1 input MUX, MIC pre-amp, PGA, S/PDIF out	32 QFN
CS4270	24	105 ADC 105 DAC	-95 ADC -95 DAC	192	Single-ended	VA = 3.3 or 5 VD = 3.3 or 5 VL = 1.8 to 5	Volume control, passive filters, 3.3 V operation	24 TSSOP
CS4271	24	108 ADC 114 DAC	-98 ADC -100 DAC	192	Single-ended ADC Differential DAC	VA = 5 VD = 3.3 or 5 VL = 2.5 to 5	Stereo Codec, volume control, compatible with CS4272	28 TSSOP
CS4272	24	114 ADC 114 DAC	-100 ADC -100 DAC	192	Differential ADC Differential DAC	VA = 5 VD = 3.3 or 5 VL = 2.5 to 5	Stereo Codec, volume control, on-chip oscillator	28 TSSOP

Specifications

HD LP AUDIO Codecs

	Part	Bus	Converters	Feature
	CS4207	HD-Audio	Six 192 kHz DACs; Four 96 kHz ADCs	S/PDIF receiver with sample-rate converter, 2 S/PDIF transmitters, MIC pre-amp, ground centered HP driver, 2 digital MIC inputs
NEW	CS4210	HD-Audio	Two 192 kHz DACs; Two 96 kHz ADCs	Ultra low power converters, GND-centered stereo HP drivers, Class-D stereo SPK amps, 2 digital MIC inputs, MIC pre-amp, S/PDIF Tx
NEW	CS4210A	HD-Audio	Two 192 kHz DACs; Two 96 kHz ADCs	Ultra low power converters, GND-centered stereo HP drivers, Class-D stereo SPK amps, 2 digital MIC inputs, MIC pre-amp
NEW	CS4213	HD-Audio	Two 192 kHz DACs; Two 96 kHz ADCs	Ultra low power converters, GND-centered stereo HP drivers, Class-D stereo SPK amps, 2 digital MIC inputs, MIC pre-amp. 5-band EQ.

Specifications

AC '97 Codecs

Part	Bus	Converters	Feature	Package
CS4202	AC '97	20-bit stereo DAC; 18-bit stereo ADC	S/PDIF transmitter	48 TQFP/LQFP
CS4205	AC '97	20-bit stereo DAC; 18-bit stereo ADC	Sample-rate converter	48 TQFP/LQFP
CS4299	AC '97	20-bit stereo DAC; 18-bit stereo ADC	Sample-rate converter	48 TQFP/LQFP

Multichannel Codec

Part	Resolution (bits)	Dynamic Range (dB)	THD+N (dB)	Sample Rate (kHz)	Analog I/O	Power Supply (V)	Comments	Package
CS42416/26	24	110/114 DAC 114 ADC	-100 DAC -100 ADC	192	Differential DACs Single-ended or Differential ADCs	VA = 5 VD = 3.3 or 5 VL = 1.8 to 5	6 DACs, 2 ADCs, digital volume control	64 LQFP
CS42418/28	24	110/114 DAC 114 ADC	-100 DAC -100 ADC	192	Differential	VA = 5 VD = 3.3 or 5 VL = 1.8 to 5	8 DACs, 2 ADCs, PLL, digital volume control	64 LQFP
CS42432	24	108 DAC 105 ADC	-98 DAC -98 ADC	192	Single-ended or Differential	VA = 3.3 or 5 VD = 3.3 VL = 1.8 to 5	6 DACs, 4 ADCs, TDM I/F	52 MQFP
NEW CS4234	24	109 DAC 105 ADC	-90 DAC -88 ADC	96	Single-ended or Differential	VA = 3.3 or 5 VL = 1.8 to 5	5 DACs, 4 ADCs, PCM and TDM I/F	40 QFN
CS42435	24	108 DAC 105 ADC	-98 DAC -98 ADC	192	Single-ended or Differential	VA = 3.3 or 5 VD = 3.3 VL = 1.8 to 5	8 DACs, 6 ADCs, TDM I/F	52 MQFP
CS42436/38	24	105/108 DAC 102/105 ADC	-95/-98 DAC -95/-98 ADC	192	Single-ended or Differential	VA = 3.3 or 5 VD = 3.3 VL = 1.8 to 5	6/8 DACs, 6 ADCs, TDM I/F	52 MQFP
NEW CS4244	24	108 DAC 105 ADC	-90 DAC -95 ADC	192	Single-ended or Differential	VA = 3.3 or 5 VL = 1.8 to 5	4 DACs, 4 ADCs, PCM and TDM I/F	40 QFN
CS42448	24	108 DAC 105 ADC	-98 DAC -98 ADC	192	Single-ended or Differential	VA = 3.3 or 5 VD = 3.3 to 5 VL = 1.8 to 5	8 DACs, 6 ADCs, TDM and PCM I/F	64 LQFP
CS42516/26	24	110/114 DAC 114 ADC	-100 DAC -100 ADC	192	Differential	VA = 5 VD = 3.3 or 5 VL = 1.8 to 5	6 DACs, 2 ADCs, S/PDIF Rx, digital volume control	64 LQFP
CS42518/28	24	110/114 DAC 114 ADC	-100 DAC -100 ADC	192	Differential	VA = 5 VD = 3.3 or 5 VL = 1.8 to 5	8 DACs, 2 ADCs, S/PDIF Rx, digital volume control	64 LQFP
CS42888	24	108 DAC 105 ADC	-98 DAC -98 ADC	192	Single-ended or Differential	VA = 3.3 or 5 VD = 3.3 or 5 VL = 1.8 to 5	8 DACs, 4 ADCs, PCM and TDM I/F	64 LQFP
CS4234	24	108 DAC 105 ADC	-90 DAC -95 ADC	192	Single-ended or Differential	VA = 3.3 or 5 VL = 1.8 to 5	5 DACs, 4 ADCs, PCM, and TDM I/F	40 QFN

CS4245

104 dB, 24-bit, 192 kHz Stereo Audio Codec with MUX and PGA

Features

- Complete stereo codec
- 24-bit conversion
- System sampling rates up to 192 kHz
- Advanced multibit Delta-Sigma architecture
- 104 dB dynamic range
- -95 dB THD+N D/A converter; -90 dB THD+N A/D converter
- Optional asynchronous serial port operation
- 6:1 input MUX
  - Up to six stereo input sources, pass-through mode
- Programmable gain amplifier: ±12 dB gain, 0.5 dB step sizes with zero crossing
- Microphone pre-amp with 32 dB gain and low-noise bias supply
- Digital volume control
- Aux output
- Popguard technology for control of clicks and pops
- Single-ended inputs and outputs
- 3.3 V or 5 V power supply
- Support for direct interface to logic levels from 1.8 V to 5 V
- Overflow detection
- Support for asynchronous A/D and D/A converter sample rates
- Pin compatible with the CS5345
- Package: 48-pin LQFP, lead-free assembly

Applications

- Automotive Entertainment Systems
- Blu-ray/DVD Recorders/ Receivers
- Digital TVs
- Digital Video Recorders/ Personal Video Recorders
- Home Media Centers
- Home Theater Products
- PC Sound Cards
- Set-Top Boxes

The highly integrated CS4245 stereo codec provides developers with a solution that streamlines product development, reduces overall design complexity and cost, and delivers premium audio performance. The CS4245's front-end features an integrated analog input selector to accommodate up to six stereo audio sources.

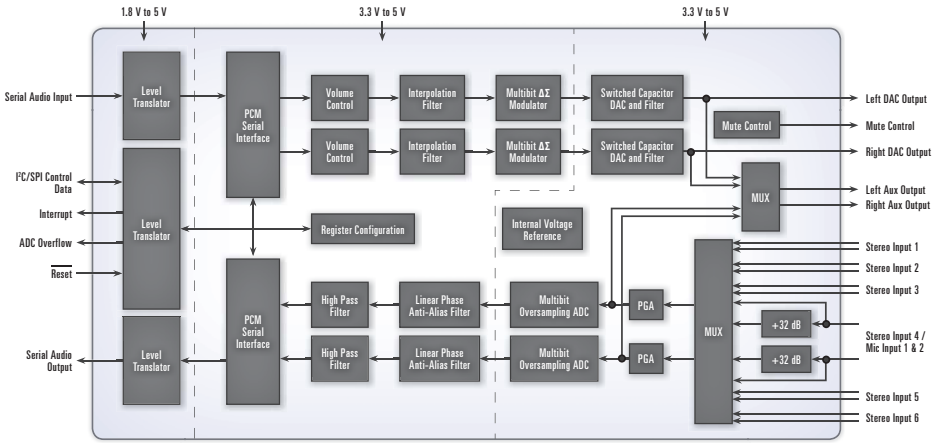

CS4265

104 dB, 24-bit, 192 kHz Stereo Audio Codec with MUX and S/PDIF transmitter

Features

- Complete stereo codec
- Integrated 192 kHz S/PDIF transmitter
- 24-bit conversion
- System sampling rates up to 192 kHz
- Advanced multibit Delta-Sigma architecture
- 104 dB dynamic range
- -95 dB THD+N D/A converter; -90 dB THD+N A/D converter
- 2:1 input MUX
- IEC60958-3 transmitter
- Programmable gain amplifier: ±12 dB gain, 0.5 dB step sizes with zero crossing
- Microphone pre-amp with 32 dB gain and low-noise bias supply
- Digital volume control
- Popguard® technology for control of clicks and pops
- Single-ended inputs and outputs
- 3.3 V or 5 V power supply
- Support for direct interface to logic levels from 1.8 V to 5 V
- Overflow detection
- High-pass filter with defeat
- Package: 32-pin QFN, lead-free assembly

Applications

- Automotive Entertainment Systems
- Blu-ray/DVD Recorders/ Receivers
- Digital TVs
- Digital Video Recorders/ Personal Video Recorders
- Home Media Centers
- Notebook Computers
- PC Sound Cards
- Set-Top Boxes

The highly integrated CS4265 stereo codec with S/PDIF output provides premium audio performance and an innovative design that integrates five chips into one. The CS4265 features an integrated analog front-end with 2:1 input MUX. Also included is a programmable gain amplifier (PGA) capable of ±12 dB of analog gain in 0.5 dB step sizes with zero-crossing, click-free transitions to maintain superior audio quality.

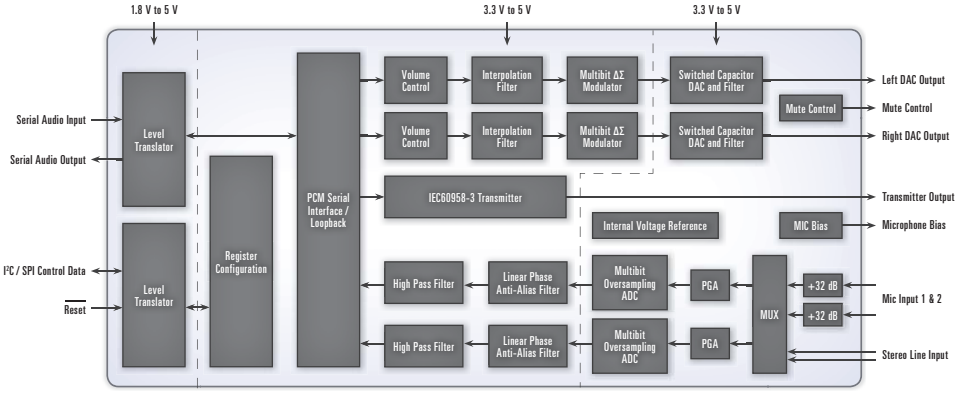

CS4270

105 dB, 24-bit, 192 kHz Stereo Audio Codec

Features

- Complete stereo codec
- 24-bit conversion
- System sampling rates up to 216 kHz
- Multibit Delta-Sigma modulator architecture
- 105 dB dynamic range (A-weighted)
- -95 dB THD+N
- Single-ended input/output architecture
- Output digital volume control, 0.5 dB steps
- Integrated level shifters for direct interface to logic levels from 1.8 V to 5.0 V
- 3.3 or 5 V core power supply
- Cirrus Logic Popguard technology
- Available in 24-pin TSSOP package, lead-free assembly
- Standalone or control part functionality

Applications

- DTV
- DVD
- Effects Pedals
- Musical Instruments
- Set-Top Boxes
- Telematics

The CS4270 Stereo codec utilizes a multibit Delta-Sigma architecture, which provides high-quality A/D and D/A data conversion with 24-bit resolution at any standard digital audio sampling rate up to 216 kHz. The CS4270 employs single-ended inputs and outputs and achieves dynamic range of 105 dB and THD+N of -95 dB.

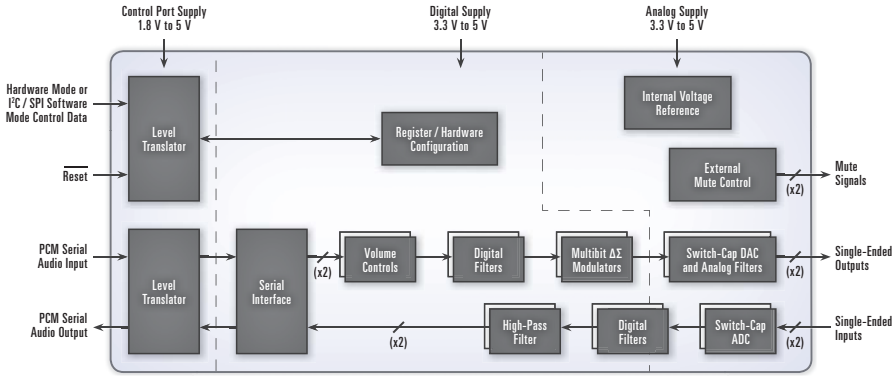

CS4271

108/114 dB, 24-bit, 192 kHz Stereo Codec

Features

- Complete stereo codec
- 24-bit conversion
- System sampling rates up to 192 kHz
- 108 dB A/D converter dynamic range
- 114 dB D/A converter dynamic range
- -98 dB A/D converter/-100 dB D/A converter THD+N
- Output digital volume control with soft ramp
- Low-latency digital filter
- Selectable digital filter response
- High-pass filter or DC offset calibration
- Single-ended input architecture
- Differential output architecture
- On-chip oscillator
- Supports master or slave mode operations
- 5 V analog power supply
- 3.3 V or 5 V digital power supply
- Supports direct interface to logic levels from 2.5 V to 5 V
- Footprint-compatible with the CS4272
- Package: 28-pin TSSOP, lead-free assembly
- Consumer and automotive D-grade availability

Applications

- Automotive Entertainment Systems
- Blu-ray/DVD recorders
- Digital Mixing Consoles
- Effects Processors
- Set-Top Box Systems

The CS4271 is a high-performance integrated audio codec that performs stereo A/D and D/A conversion of up to 24-bit serial values at sample rates up to 192 kHz. The CS4271 utilizes a single-ended input and differential output architecture to deliver high analog performance and maximizes system flexibility with an on-chip oscillator, output volume control with soft ramp and zero crossing, selectable digital filter response and integrated level shifters for direct interface to logic levels from 2.5 V to 5 V.

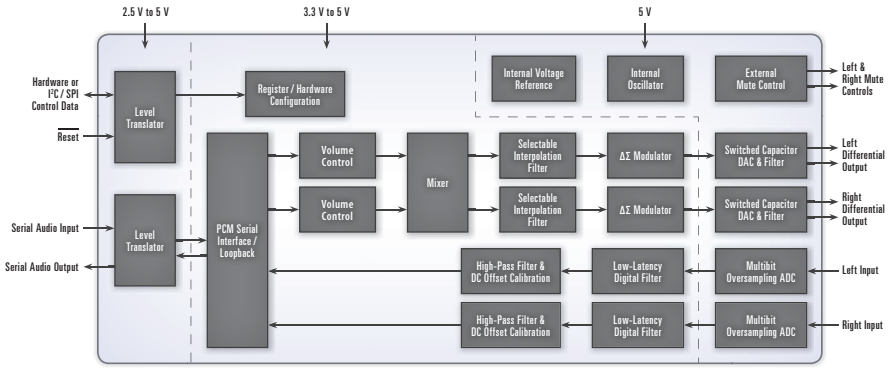

CS4272

114 dB, 24-bit, 192 kHz Stereo Codec

Features

- Complete stereo codec
- 24-bit conversion
- System sampling rates up to 192 kHz
- 114 dB dynamic range
- -100 dB THD+N
- Output digital volume control with soft ramp
- Low-latency digital filter
- Selectable digital filter response
- High-pass filter or DC offset calibration
- Differential analog architecture
- On-chip oscillator
- Supports master or slave mode operations
- 5 V analog power supply
- 3.3 V or 5 V digital power supply
- Supports direct interface to logic levels from 2.5 V to 5 V
- Footprint-compatible with the CS4271
- Package: 28-pin TSSOP, lead-free assembly
- Consumer and automotive D-grade availability

Applications

- Automotive Entertainment Systems
- Blu-ray/DVD Recorders
- Digital Mixing Consoles
- Effects Processors
- Set-Top Boxes

The CS4272 is a high-performance integrated audio codec that performs stereo A/D and D/A conversion of up to 24-bit serial values at sample rates up to 192 kHz. The CS4272 utilizes a differential analog architecture to deliver unmatched analog performance and maximize system flexibility with an on-chip oscillator, output volume control with soft ramp and zero crossing, selectable digital filter response and integrated level shifters for direct interface to logic levels from 2.5 V to 5 V.

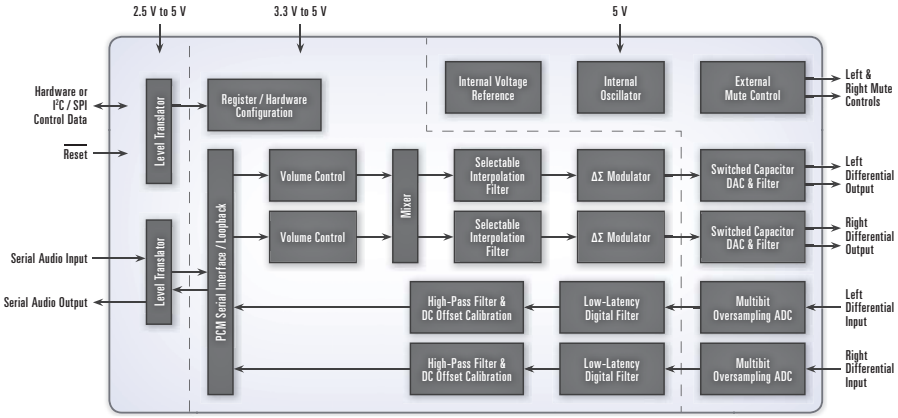

CS4207

HD Audio Codec

Features

- Headphone amplifier features
  - 105 dB dynamic range, -95 dB THD+N
  - Ground-centered outputs – no DC-blocking capacitors required
  - 44 mW power/channel into 16 Ω
- Digital to analog features
  - 108 dB dynamic range, -95 dB THD+N
  - 192 kHz sample rates independently.
  - Digital volume control
- Analog to digital features
  - 105 dB dynamic range, -92 dB THD+N
  - Analog programmable gain amplifier (PGA) +/-12dB
  - Microphone pre-amplifier up to +30 dB gain settings
  - 96 kHz sample rates independently
  - Additional digital attenuation control -13.0 dB to -51.0 dB
- Digital interface for two dual digital microphone inputs
- S/PDIF receiver
  - 32 kHz to 192 kHz sample rate range
  - Integrated sample rate converter
- Two S/PDIF transmitters
  - 32 kHz to 192 kHz sample rate range
- Power consumption as low as < 7 mW
- Jack detect does not require HDA bus BITCLK
- Variable power supplies
  - 1.5 V to 1.8 V digital core voltage
  - 3.3 V to 5.0 V analog core voltage & headphone drivers
  - 1.5 V to 3.3 V HD bus interface logic
  - 3.3 V interface logic levels for GPIO, S/PDIF and digital microphone

Applications

- Netbooks or Mobile Internet Devices
- Notebook Computers
- PC-based Automotive Systems

The CS4207 is a highly integrated, multi-channel low-power HD audio codec featuring six 192 kHz DACs and four 96 kHz ADCs. The device also offers one S/PDIF receiver with an integrated sample rate converter, two 192 kHz S/PDIF transmitters, microphone pre-amp, a ground centered headphone driver and two digital microphone inputs. This robust set of features makes it ideal for notebooks, netbooks or Mobile Internet Devices (MIDs) and PC-based automotive systems.

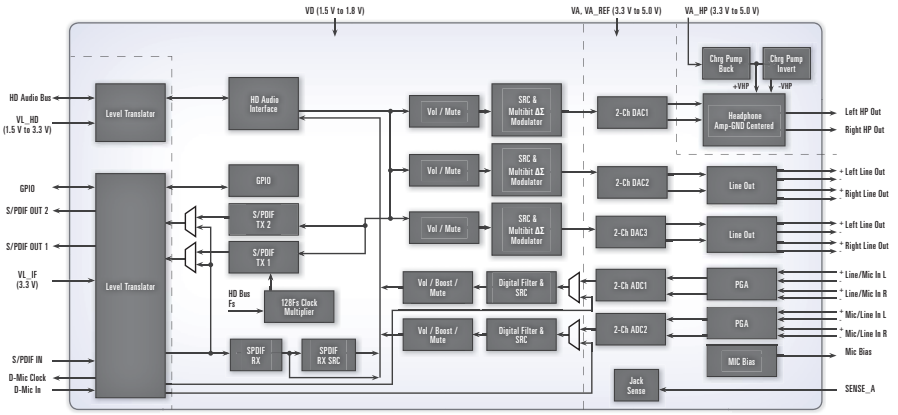

CS4210

Ultra Low Power HD Audio Codec with HP and Speaker Amps

Features

- Ground-Centered Stereo Headphone/Line Amplifier
  - 8.7 mW Stereo Playback Quiescent Power
  - 94 dB Dynamic Range (A-weighted) into 32 Ω
  - -80 dB THD+N into 32 Ω
  - 2 x 17 mW into 16 Ω
  - 2 x 8.5 mW into 32 Ω
  - No DC-Blocking Capacitors Required
  - Integrated Negative Voltage Regulator
- Class D Filterless Stereo Speaker Drivers
  - 94 dB Dynamic Range (A-weighted)
  - 0.02% THD+N at 1 W
  - 2 x 2.3 W into 4 Ω (1% THD+N)
  - 2 x 2.9 W into 4 Ω (10% THD+N)
  - 90% Operating Efficiency
  - 60 dB PSRR
  - Over-Current Protection with Automatic Recovery
  - Over-Temperature Protection with Software-Controlled Recovery
- Supports 44.1 kHz to 192 kHz Sample Rates
- Digital Volume Control
  - +6.0 dB to -57.5 dB in 0.5 dB Steps
  - Zero Cross and/or Soft Ramp Transitions
- Fast D3 to D0 Transition
  - Audio Playback in less than 10 ms
  - Full Fidelity in less than 75 ms

Applications

- Laptops
- Tablets
- All-in-one Desktops

The CS4210 is a highly integrated stereo low power HD audio codec featuring a 192 kHz DAC, an ADC with 2-to-1 analog input MUX, a digital microphone interface, PWM speaker drivers and a ground centered Head-phone driver.

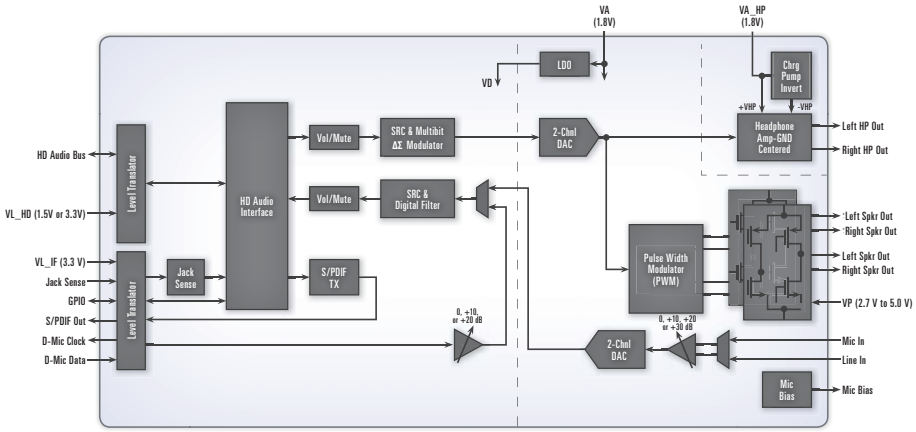

CS4210A

Ultra Low Power HD Audio Codec with HP and Speaker Amps

Features

- Ground-Centered Stereo Headphone/Line Amplifier
  - 8.7 mW Stereo Playback Quiescent Power
  - 94 dB Dynamic Range (A-weighted) into 32 Ω
  - -80 dB THD+N into 32 Ω
  - 2 x 17 mW into 16 Ω
  - 2 x 8.5 mW into 32 Ω
  - No DC-Blocking Capacitors Required
  - Integrated Negative Voltage Regulator
- Class D Filterless Stereo Speaker Drivers
  - 94 dB Dynamic Range (A-weighted)
  - 0.02% THD+N at 1 W
  - 2 x 2.3 W into 4 Ω (1% THD+N)
  - 2 x 2.9 W into 4 Ω (10% THD+N)
  - 90% Operating Efficiency
  - 60 dB PSRR
  - Over-Current Protection with Automatic Recovery
  - Over-Temperature Protection with Software-Controlled Recovery
- Supports 44.1 kHz to 192 kHz Sample Rates
- Digital Volume Control
  - +6.0 dB to -57.5 dB in 0.5 dB Steps
  - Zero Cross and/or Soft Ramp Transitions
- Fast D3 to D0 Transition
  - Audio Playback in less than 10 ms
  - Full Fidelity in less than 75 ms

Applications

- Laptops
- Tablets
- All-in-one Desktops

The CS4210A is a highly integrated stereo low power HD audio codec featuring a 192 kHz DAC, an ADC with 2-to-1 analog input MUX, a digital microphone interface, PWM speaker drivers and a ground centered Head-phone driver.

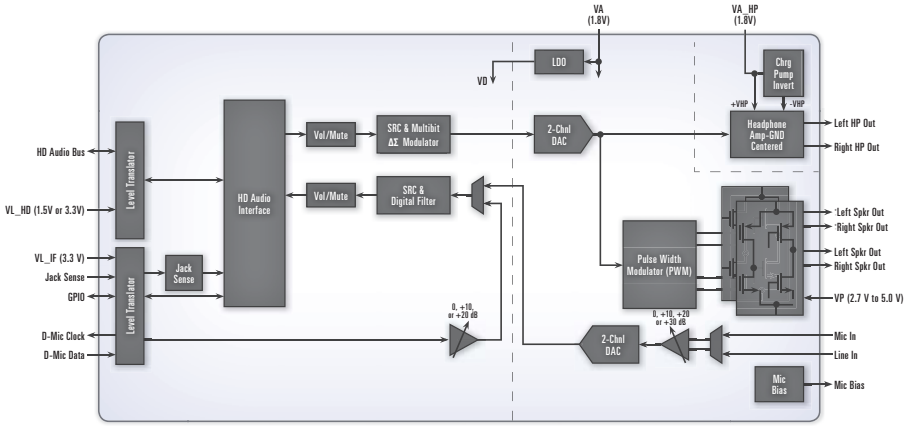

CS4213

Ultra Low Power HDA Codec with HP/SPKR Amps and HW EQ

Features

- Ground-Centered Stereo Headphone/Line Amplifier
  - 8.7 mW Stereo Playback Quiescent Power
  - 94 dB Dynamic Range (A-weighted) into 32 Ω
  - -80 dB THD+N into 32 Ω
  - 2 x 17 mW into 16 Ω
  - 2 x 8.5 mW into 32 Ω
  - No DC-Blocking Capacitors Required
  - Integrated Negative Voltage Regulator
- Class D Filterless Stereo Speaker Drivers
  - 94 dB Dynamic Range (A-weighted)
  - 0.02% THD+N at 1 W
  - 2 x 2.3 W into 4 Ω (1% THD+N)
  - 2 x 2.9 W into 4 Ω (10% THD+N)
  - 90% Operating Efficiency
  - 60 dB PSRR
  - Over-Current Protection with Automatic Recovery
  - Over-Temperature Protection with Software-Controlled Recovery
- Supports 44.1 kHz to 192 kHz Sample Rates
- Digital Volume Control
  - +6.0 dB to -57.5 dB in 0.5 dB Steps
  - Zero Cross and/or Soft Ramp Transitions
- Fast D3 to D0 Transition
  - Audio Playback in less than 10 ms
  - Full Fidelity in less than 75 ms

Applications

- Laptops
- Tablets
- All-in-one Desktops

The CS4213 is a highly integrated stereo low power HD audio codec featuring a 192 kHz DAC, an ADC with 2-to-1 analog input MUX, a digital microphone interface, PWM speaker drivers and a ground centered Head-phone driver.

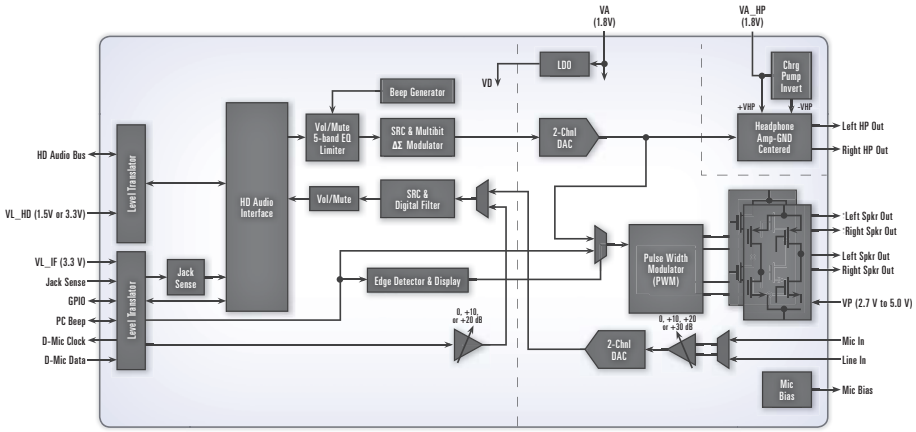

CS4202

Audio Codec '97 with Headphone Amplifier

Features

- AC '97 2.2-compliant
- Exceeds Microsoft® PC 2001 audio requirements
- Integrated high-performance headphone amplifier
- On-chip PLL for use with external clock sources
- Integrated high-performance microphone pre-amplifier
- Automatic jack sense through general-purpose I/O
- BIOS driver interface for audio feature configuration through software
- 20-bit stereo D/A converter; 18-bit stereo A/D converter with sample-rate converters
- Inputs:
  - Line-level: 3 stereo and 2 mono
  - Mic-level: 2 mono
  - High-quality pseudo-differential CD input
- Outputs:
  - S/PDIF digital audio output
  - I^2S serial digital for cost-effective 6-channel applications
  - Simultaneous S/PDIF and 6-channel audio playback
  - Stereo and mono line-level
- Package: 48-pin TQFP, lead-free assembly

Applications

- High-Quality Audio Systems for Desktop, Portable and Entertainment PCs
- PC 99- and PC 2001-Compliant

The CS4202 is an AC '97 2.2-compliant, stereo audio codec designed for PC multimedia systems. It uses industry-leading Delta-Sigma mixed-signal technology with features that are designed to help enable the design of PC 99- and PC 2001-compliant, high-quality audio systems for desktop, portable and entertainment PCs.

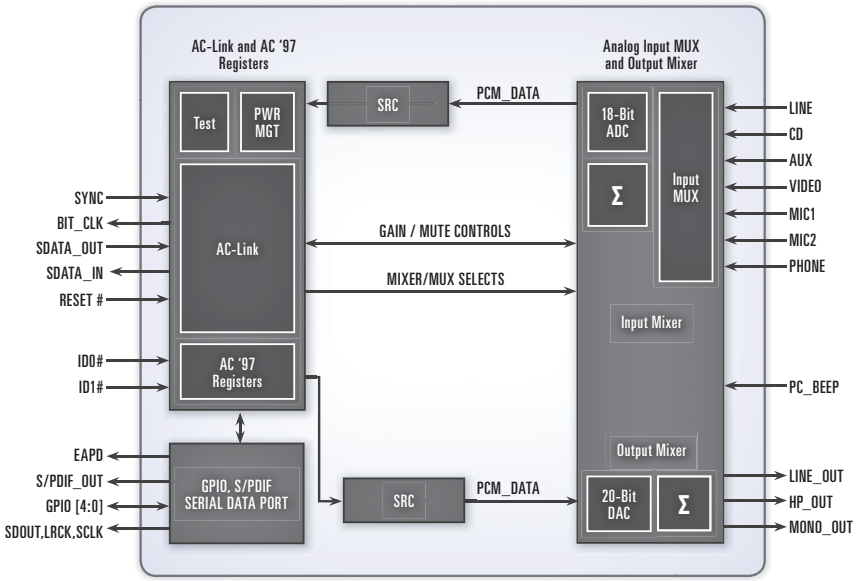

CS4205

Audio Codec '97 for Portable Computing

Features

- AC '97 2.1-compliant
- Meets or exceeds the Microsoft® PC 99 and PC 2001 audio performance requirements
- Integrated asynchronous I²S input port (ZV port)
- Integrated high-performance microphone pre-amplifier
- Integrated digital effects processing for bass and treble
- Digital docking of I²S output, 3 synchronous I²S inputs
- High-performance digital mixer with SRS 3D stereo enhancement
- On-chip PLL for use with external clock sources
- Dedicated microphone A/D converter
- S/PDIF digital audio output
- PC beep bypass
- 20-bit stereo D/A converter; 18-bit stereo A/D converter with sample-rate converters
- Analog, line-level stereo inputs: LINE __ IN, VIDEO and AUX
- High-quality, pseudo-differential CD input
- Extensive power-management support
- Package: 48-pin TQFP, lead-free assembly

Applications

- High-Quality Audio Systems for Desktop, Portable and Entertainment PCs
- PC 99- and PC 2001-Compliant

The CS4205 is an AC '97 2.1-compliant, stereo audio codec designed for PC multimedia systems. It uses industry-leading Delta-Sigma and mixed-signal technology.

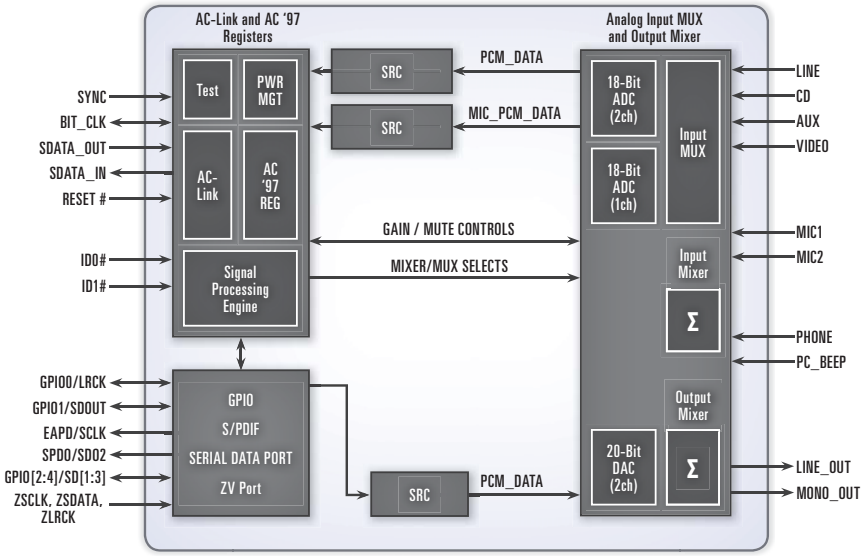

CS4299

Audio Codec '97

Features

- AC '97 2.1-compliant
- Meets or exceeds the Microsoft® PC 99 audio performance requirements
- Industry-leading mixed-signal technology
- 20-bit stereo D/A converter; 18-bit stereo A/D converter
- Sample-rate converters
- Four analog, line-level stereo inputs: LINE __ IN, CD, VIDEO and AUX
- Two analog, line-level mono inputs: modem and internal PC beep
- Dual stereo line-level outputs: LINE __ OUT and ALT __ LINE __ OUT
- Dual microphone inputs
- High-quality, pseudo-differential CD input
- S/PDIF digital audio output
- 3D stereo enhancement
- Extensive power-management support
- Package: 48-pin TQFP, lead-free assembly

Applications

- PC 99-Compliant Desktop, Portable and Entertainment PCs

The CS4299 is an AC '97 2.1-compliant, stereo audio codec designed for PC multimedia systems. Using industry-leading Delta-Sigma and mixed-signal technology, the CS4299 enables the design of PC 99-compliant desktop, portable and entertainment PCs.

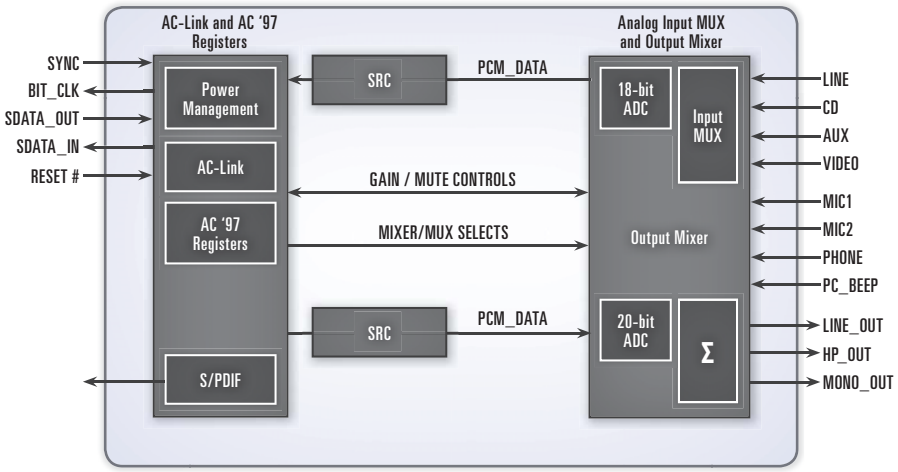

CS42416/18/26/28

114 dB, 192 kHz, 6- and 8-Channel Surround-Sound Codecs with PLL

Features

- Six or eight D/A converters, two 24-bit A/D converters
- 110 dB or 114 dB D/A dynamic range
- 114 dB A/D dynamic range
- -100 dB THD+N
- System sampling rates up to 192 kHz
- Integrated low-jitter PLL for increased system jitter tolerance
- PLL clock or OMCK system clock selection
- Seven configurable general-purpose outputs
- A/D converter high-pass filter for DC offset calibration
- Expandable A/D converter channels and 1-line mode support
- Digital output volume control with soft ramp
- Digital ±15 dB input gain adjust for A/D converter
- Differential analog architecture
- 5 V analog power supply
- 3.3 V or 5 V digital power supply
- Supports logic levels between 1.8 V and 5 V
- Package: 64-pin LQFP, lead-free assembly
- Consumer and automotive D-grade availability

Applications

- Audio/Video Receivers
- Automotive Entertainment Systems
- Blu-ray/DVD Receivers
- Digital Speaker Systems

The CS42416/18/26/28 Family of 24-bit surround-sound codecs provides two A/D and six or eight D/A Delta-Sigma converters, as well as an integrated PLL (phase-locked loop) for a low-jitter system clock. This family of products supports sampling rates of up to 192 kHz.

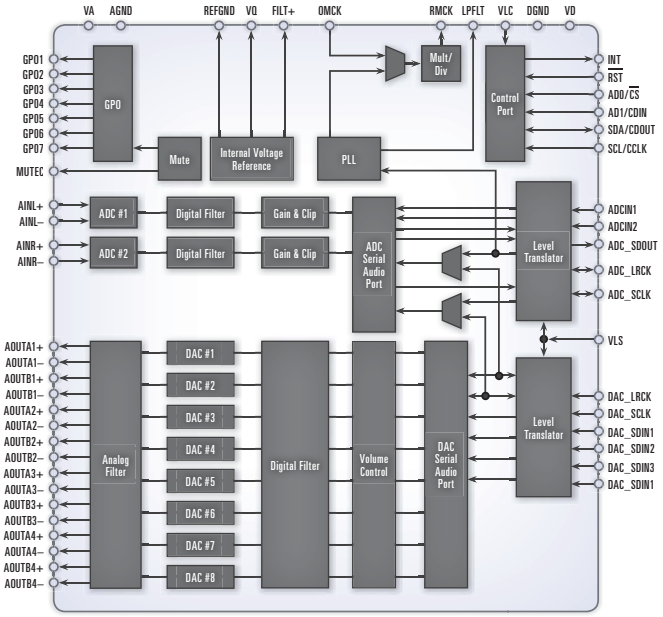

CS42432

108 dB, 192 kHz 4-in, 6-out Surround-Sound TDM Codec

Features

- Four 24-bit A/D converters and six 24-bit D/A converters
- System sampling rates up to 192 kHz D/A converter/96 kHz A/D converter
- A/D converter dynamic range
  - 105 dB differential
  - 102 dB single-ended
- D/A converter dynamic range
  - 108 dB differential
  - 105 dB single-ended
- THD+N (A/D and D/A converters)
  - -98 dB differential
  - -95 dB single-ended
- A/D input MUX—single-ended mode
- Programmable A/D converter high-pass filter for DC offset calibration
- Compatible with industry-standard TDM serial interface
- Auxiliary input source for additional external A/D or S/PDIF receiver
- Logarithmic digital volume control
- I²C/SPI host control port
- Hardware mode
- Support for logic levels between 1.8 V and 5 V
- 3.3 V or 5 V analog power supply
- 3.3 V digital supply
- Package: 52-pin MQFP, lead-free assembly
- Consumer and automotive D-grade availability

Applications

- Audio/Video Receivers
- Applications That Require Wide Dynamic Range, Negligible Distortion and Low Noise
- Automotive Entertainment Systems
- Blu-ray/DVD Receivers

The CS42432 is a highly integrated codec engineered to simplify design for home theaters and automotive audio systems. This codec allows system designers to deliver advanced multichannel surround-sound performance for entry- and mid-level audio products.

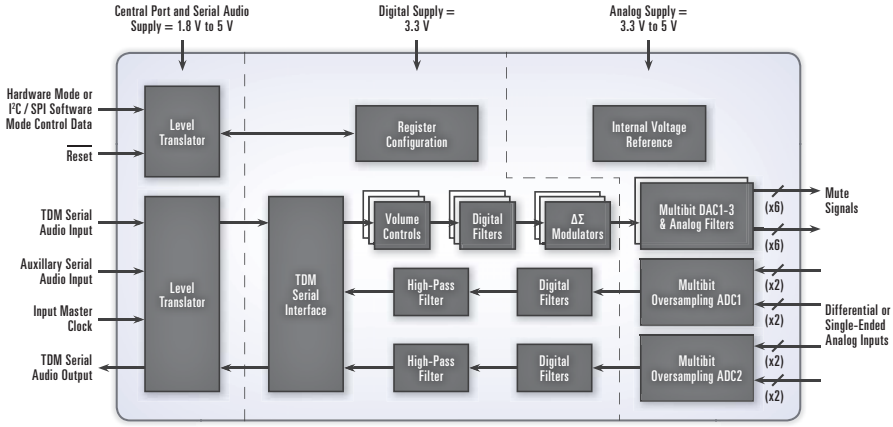

CS4234

4 In/5 Out Codec with Programmable Class H Controller

Features

- DAC Features
  - Advanced multibit Delta–Sigma modulator
  - 24-bit resolution
  - Differential or single-ended outputs
  - -109 dB dynamic range (A-weighted)
  - -90 dB THD+N
  - 2 V_{RMS} full-scale output into 3-k Ω AC load
  - Rail-to-rail operation
  - Programmable group delay in 4-channel audio output path
- ADC Features
  - Advanced multibit Delta–Sigma modulator
  - 24-bit resolution
  - Differential inputs
  - -105 dB dynamic range (A-weighted)
  - -88 dB THD+N
  - 2 V_{RMS} full-scale input
- System Features
  - TDM, left justified, and I^2S serial inputs and outputs
  - Nondelayed low-latency path
  - Supports sample rates up to 96 kHz
  - Can be used with any integrated Class AB amplifier IC or discrete amplifier solution.
  - Increases efficiency of Class AB amplifiers
  - Creates audio tracking reference signal for external switch-mode power supply
  - Internal envelope tracking of up to 32 channels
  - Input path for externally generated tracking signal

Applications

- Automotive Audio Amps
- Mixing Consoles
- Effects Processors

The CS4234 is a highly versatile codec that combines 4 channels of high performance analog to digital conversion, 4 channels of high performance digital to analog conversion for audio, and 1 channel of digital to analog conversion to provide a nondelayed audio reference signal to an external Class H tracking power supply. If not used to drive a tracking power supply, the 5th DAC can instead be used as a standard audio grade DAC, with performance specifications identical to that of the 4 DACs in the audio path. Additionally, the CS4234 includes tunable group delay for each of the 4 audio DAC paths to provide lead time for the external switch-mode power supply, and a nondelayed path into the DAC outputs for input signals requiring a low-latency path to the outputs.

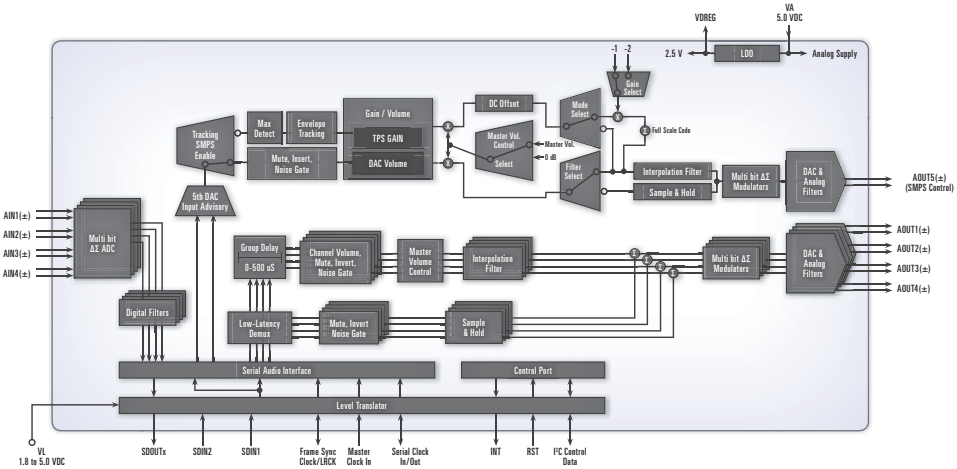

CS42435

108 dB, 192 kHz, 4-In, 8-Out TDM Codec

Features

- Four 24-bit A/D converters and eight 24-bit D/A converters
- System sampling rates up to 192 kHz
- A/D converter dynamic range
  - 105 dB differential
  - 102 dB single-ended
- D/A converter dynamic range
  - 108 dB differential
  - 105 dB single-ended
- THD+N (A/D and D/A converters)
  - -98 dB differential
  - -95 dB single-ended
- A/D input MUX—single-ended mode
- Programmable A/D converter high-pass filter for DC offset calibration
- Compatible with industry-standard TDM serial interface
- Support for logic levels between 1.8 V and 5 V
- Package: 52-pin MQFP, lead-free assembly
- Consumer and automotive D-grade availability

Applications

- Audio/Video Receivers
- Applications That Require Wide Dynamic Range, Negligible Distortion and Low Noise
- Automotive Entertainment Systems
- Blu-ray/DVD Receivers

Introduced to specifically meet the needs of automotive audio platforms, the CS42435 codec incorporates features such as a flexible power supply, level translators and digital integration. This IC simplifies the designers' job, allowing them to deliver advanced multichannel surround-sound performance for entry- and mid-level audio products, all in a single 52-pin LQFP package.

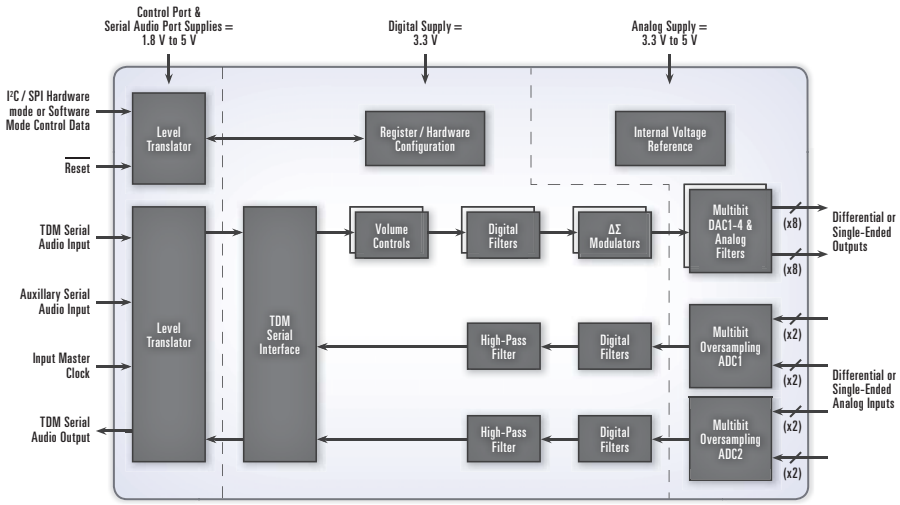

CS42436/38

108 dB, 192 kHz, 6-in, 6-out/8-out Surround-Sound TDM Codecs

Features

- Six 24-bit A/D converters and eight 24-bit D/A converters (CS42438)
- System sampling rates up to 192 kHz D/A converter/96 kHz A/D converter
- A/D converter dynamic range
  - 105 dB differential
  - 102 dB single-ended
- D/A converter dynamic range
  - 108 dB differential
  - 105 dB single-ended
- THD+N (A/D and D/A converters)
  - -98 dB differential
  - -95 dB single-ended
- A/D input MUX—single-ended mode
- Programmable A/D converter high-pass filter for DC offset calibration
- I²C/SPI host control port
- Hardware mode
- Compatible with industry-standard TDM serial interface
- Support for logic levels between 1.8 V and 5 V
- Package: 52-pin MQFP, lead-free assembly
- Consumer and automotive D-grade availability

Applications

- A/V Receivers
- Applications That Require Wide Dynamic Range, Negligible Distortion and Low Noise
- Automotive Entertainment Systems
- Blu-ray/DVD Receivers

The CS42436/38 family of highly integrated codecs is engineered to simplify design for home theaters and automotive audio systems. These codecs allow system designers to deliver advanced multichannel surround-sound performance for entry- and mid-level audio products.

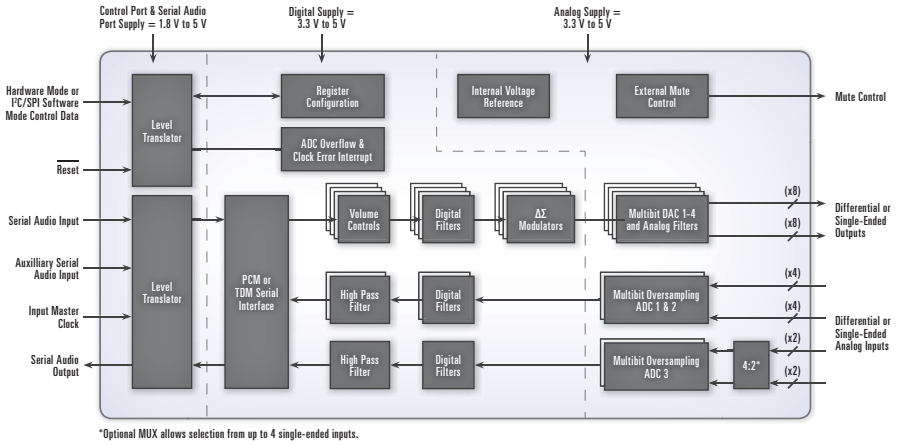

CS4244

4 In/4 Out Audio Codec with PCM and TDM Interfaces

Features

- Differential or Single-ended Outputs
- Dynamic Range (A-Weighted)
  - -109 dB Differential
  - -105 dB Single-Ended
- THD+N
  - -90 dB Differential
  - -88 dB Single-Ended
- 2 V_{RMS} Full-scale Output into 3 k Ω AC Load
- Rail-to-rail Operation
- Differential or Single-ended Inputs
- Dynamic Range (A-weighted)
  - -105 dB Differential
  - -102 dB Single-Ended
- THD+N
  - -88 dB Differential
  - -88 dB Single-Ended
- TDM, Left Justified, and I²S Serial Inputs and Outputs
- I²C Host Control Port
- Supports Logic Levels Between 5 V and 1.8 V
- 24-bit resolution
- Supports Sample Rates up to 96 kHz
- Consumer and Automotive temperature grade availability

Applications

- Automotive Audio Systems
- Audio Mixing Consoles
- Audio Effects Processors
- AV Receivers
- DVD Receivers
- Amplifiers
- Automotive Head Units with Internal Class H

The CS4244 codec provides four multibit analog-to-digital and four multibit digital-to-analog delta-sigma converters and is compatible with either differential or single-ended inputs and outputs. Digital volume control, noise gating, and muting is available for each DAC path. A selectable high-pass filter is provided for the 4 ADC inputs. The CS4244 supports both Master or Slave mode.

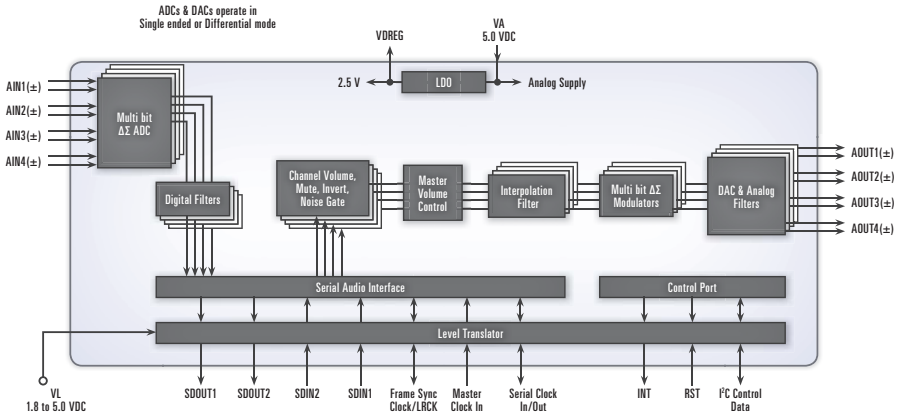

CS42448

108 dB, 192 kHz, 6-in, 8-out Surround-Sound Codec

Features

- Six 24-bit A/D converters and eight 24-bit D/A converters
- System sampling rates up to 192 kHz
- A/D converter dynamic range
  - 105 dB differential
  - 102 dB single-ended
- D/A converter dynamic range
  - 108 dB differential
  - 105 dB single-ended
- THD+N (A/D and D/A converters)
  - -98 dB differential
  - -95 dB single-ended
- A/D input MUX—single-ended mode
- Cirrus Logic Popguard® technology to minimize clicks and pops
- Programmable A/D converter high-pass filter for DC offset calibration
- I²C/SPI host control port
- Support for logic levels between 1.8 V and 5 V
- Package: 64-pin LQFP, lead-free assembly
- Selectable audio interface formats
- Left-justified, I²S, TDM
- Consumer and automotive D-grade availability

Applications

- A/V Receivers
- Automotive Entertainment Systems
- Blu-ray/DVD Receivers

The CS42448 is a highly integrated codec that is engineered to simplify design for home theaters and automotive audio systems. This codec allows system designers to deliver advanced multichannel surround-sound performance for entry- and mid-level audio products.

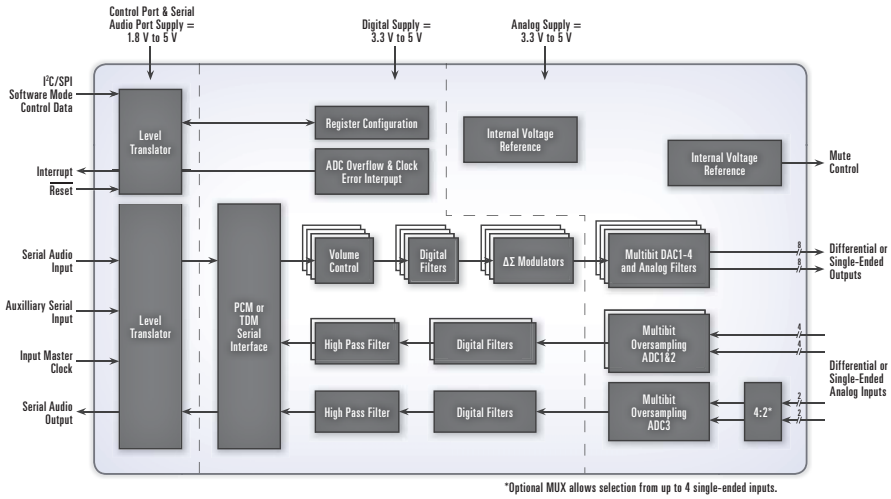

CS42516/26

110/114 dB, 192 kHz, 2-in, 6-out Surround-Sound Codecs with S/PDIF Receivers

Features

- Six 24-bit D/A converters, two 24-bit A/D converters
- 110 dB D/A converter/114 dB A/D converter dynamic range (CS42516)
- 114 dB D/A converter/114 dB A/D converter dynamic range (CS42526)
- -100 dB THD+N
- System sampling rates up to 192 kHz
- S/PDIF receiver compatible with EIAJ CP1201 and IEC-60958
- 8:2 S/PDIF input MUX
- A/D converter high-pass filter for DC offset calibration
- Digital output volume control with soft ramp
- Digital ±15 dB input gain adjust for A/D converter
- Differential analog architecture
- 5 V analog power supply
- 3.3 V or 5 V digital power supply
- Supports logic levels between 1.8 V and 5 V
- Package: 64-pin LQFP, lead-free assembly
- Consumer and automotive D-grade availability

Applications

- A/V Receivers
- Automotive Entertainment Systems
- Blu-ray/DVD Receivers
- Digital Speakers

The CS42516/26 codec family provides two A/D and six D/A Delta-Sigma converters, as well as an integrated S/PDIF receiver. The CS42516/26 family's integrated S/PDIF receiver supports up to eight inputs, clock recovery circuitry and format auto-detection.

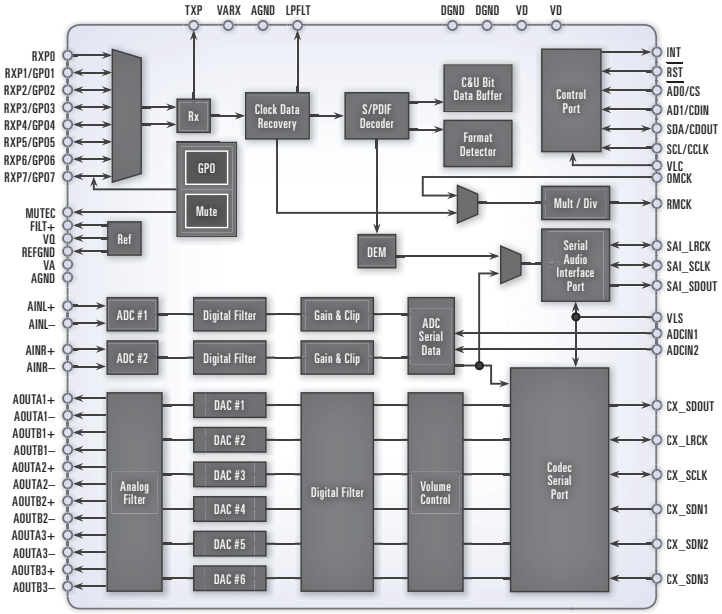

CS42518/28

110/114 dB, 192 kHz, 2-in, 8-out Surround-Sound Codecs with S/PDIF Receiver

Features

- Eight 24-bit D/A converters, two 24-bit A/D converters
- 110 dB D/A converter/114 dB A/D converter dynamic range (CS42518)
- 114 dB D/A converter/114 dB A/D converter dynamic range (CS42528)
- -100 dB THD+N
- System sampling rates up to 192 kHz
- S/PDIF receiver compatible with EIAJ CP1201 and IEC-60958
- 8:2 S/PDIF input MUX
- Recovered S/PDIF clock or OMCK system clock selection
- A/D converter high-pass filter for DC offset calibration
- Digital output volume control with soft ramp
- Digital ±15 dB input gain adjust for A/D converter
- Differential analog architecture
- 5 V analog power supply
- 3.3 V or 5 V digital power supply
- Supports logic levels between 1.8 V and 5 V
- Package: 64-pin LQFP, lead-free assembly
- Consumer and automotive D-grade availability

Applications

- A/V Receivers
- Automotive Entertainment Systems
- Blu-ray/DVD Receivers
- Digital Speakers

The CS42518/28 codec family provides two A/D and eight D/A Delta-Sigma converters, as well as an integrated S/PDIF receiver. The CS42518/28 family's integrated S/PDIF receiver supports up to eight inputs, clock recovery circuitry and format autodetection.

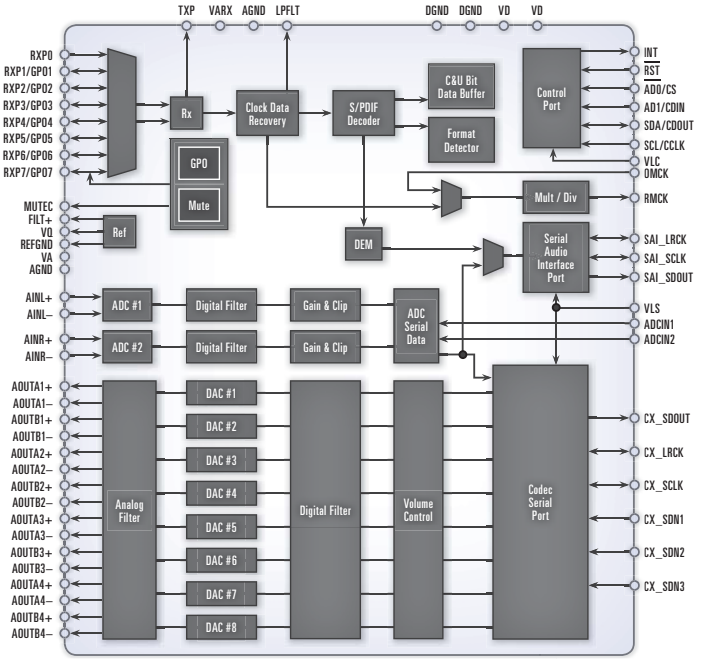

CS42888

108 dB, 192 kHz 4-in, 8-out Multi-Channel Codec

Features

- Four 24-bit A/D, eight 24-bit D/A converters
- A/D converter dynamic range
  - 105 dB differential
  - 102 dB single-ended
- D/A converter dynamic range
  - 108 dB differential
  - 105 dB single-ended
- A/D/D/A converter THD+N
  - -98 dB differential
  - -95 dB single-ended
- Compatible with industry-standard time division multiplexed (TDM) serial interface
- System sampling rates up to 192 kHz
- Programmable A/D converter high-pass filter for DC offset calibration
- Logarithmic digital volume control
- I²C/SPI host control port
- Hardware mode
- Supports logic levels between 5 V and 1.8 V
- Popguard® technology
- Lead-free assembly
- Consumer and automotive grade availability

Applications

- A/V Receivers
- Applications that Require Wide Dynamic Range, Negligible Distortion and Low Noise
- Automotive Entertainment Systems
- Blu-ray/DVD Receivers

The CS42888 codec provides four multibit A/D and eight multibit D/A Delta-Sigma converters. The codec is capable of operation with either differential or single-ended inputs and outputs, in a 64-pin LQFP package.

Four fully differential, or single-ended, inputs are available on stereo A/D converter1 and A/D converter2. Digital volume control is provided for each A/D converter channel, with selectable overflow detection.

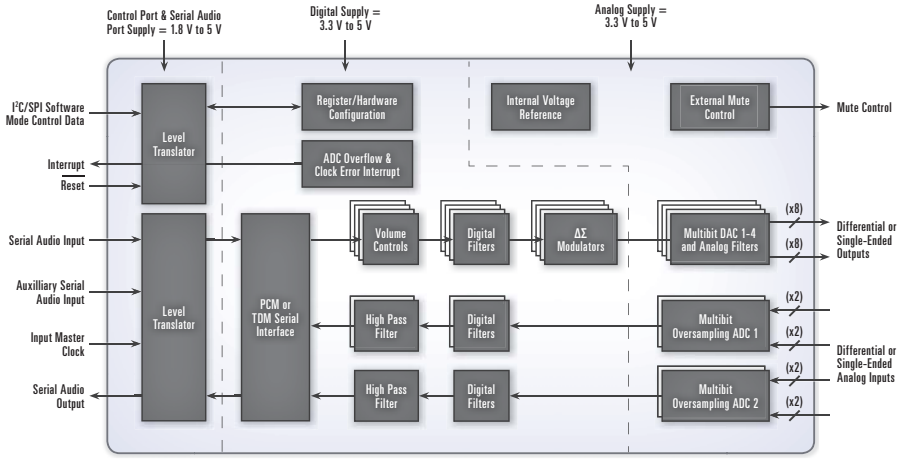

Specifications

Portable Audio Converters

Part	Resolution (bits)	Dynamic Range (dB)	THD+N (dB)	Sample Rate (kHz)	Analog I/O	Power Supply (V)	Comments	Package
CS42L51	24	98 ADC 98 DAC	-88 ADC -86 DAC	96	Single-ended	VA = 1.8 to 2.5 VD = 1.8 to 2.5 VL = 1.8 to 3.3	Codec, 3:1 MUX, PGA, MIC pre-amp, HP amp	32 QFN
CS42L52	24	98 ADC 98 DAC	-88 ADC -86 DAC	96	Single-ended	VA/VD = 1.65 to 2.83 VP = 2.37 to 5.35 VL = 1.8 to 3.3	Codec, 4:1 MUX, PGA, MIC pre-amp, HP/speaker amps	40 QFN
CS42L55	24	95 ADC 99 DAC	-87 ADC -86 DAC	48	Pseudo-differential	VA/VD = 1.65 to 2.71 VCP = 1.65 to 2.73 VL = 1.65 to 3.47	Codec, Class-H HP amp, 2:1 MUX, PGA	36 QFN
CS42L73	24	91 ADC 97 DAC	-85	48	Pseudo-differential	VA/VCP/VL = 1.66 to 1.94 VP = 3.0 to 5.25 VD = 0.85 to 1.40	2 ADCs, 4 DACs, Class-H HP Class A/B speaker driver 3x asynchronous serial ports	60 WLCSP 65 BGA
CS43L21	24	98	-86	96	Single-ended	VA = 1.8 to 2.5 VD = 1.8 to 2.5 VL = 1.8 to 3.3	DAC with HP amp and volume control	32 QFN
CS43L22	24	98	-88	96	Single-ended	VA/VD = 1.65 to 2.83 VP = 2.37 to 5.35 VL = 1.8 to 3.3	DAC with HP and Class-D speaker amps	40 QFN
CS53L21	24	98	-88	96	Single-ended	VA = 1.8 to 2.5 VD = 1.8 to 2.5 VL = 1.8 to 3.3	ADC, 3:1 MUX, PGA, MIC pre-amp	32 QFN

CS42L51

Low-Power Stereo Codec with Headphone Amplifier

Features

- Low-power audio codec
  - Stereo playback: 13 mW @ 1.8 V
  - Stereo record and playback: 20 mW @ 1.8 V
- Operates from a single 1.8 V or 2.5 V supply
- Analog inputs
  - 3:1 stereo input selector
  - PGA, +12 dB to -3 dB in 0.5 dB steps
  - +32 dB or +16 dB stereo microphone pre-amp with bias supply
  - Automatic level control with overflow detection
- Analog outputs
  - Configurable as stereo headphone or line-level outputs
  - Ground centered outputs—no DC-blocking capacitors required
  - Up to 88 mW into stereo 16 Ω headphones (2.5 V)
  - Up to 46 mW into stereo 16 Ω headphones (2.5 V)
- Digital signal processing engine
  - Digital bass and treble tone control
  - Programmable peak signal detect and limiter
  - Digital volume control with soft ramp and zero cross
  - On-chip beep generation
- 98 dB dynamic range
- -88 dB THD+N (-75 dB with HP load)
- 24-bit conversion, up to 96 KHz sample rates
- Flexible power-down management—chip/block selectable
- Package: 32 QFN, lead-free assembly

Applications

- Digital Cameras & Camcorders
- Digital Voice Recorders
- Guitar Effects Pedals
- Hard-Disc Drive & Flash-Based Portable Audio Players
- Mini-Disc Players and Recorders
- PDAs & Smartphones
- Personal Media Players
- Portable Audio Recording Systems
- Portable Gaming Systems
- Wireless Headsets

The CS42L51 delivers excellent audio performance while providing portable device developers with an innovative solution that maximizes battery life while minimizing end-product form factors. The CS42L51's key distinction is that it operates from a single, 1.8 V power supply for low power consumption, yet delivers plenty of output power, 46 mW, into stereo 16 Ω headphones for a great listening experience.

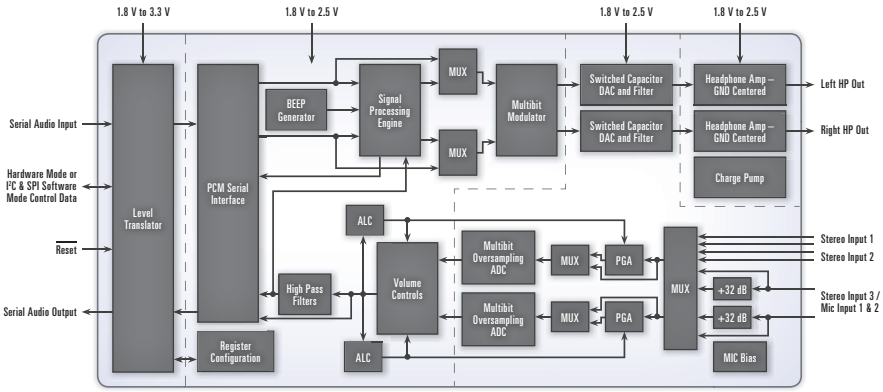

CS42L52

Low-Power Stereo Codec with HP Amp and 2 W Class-D Stereo Speaker Amplifier

Features

- Low-power operation
  - Stereo analog pass through: 10 mW @ 1.8 V
  - Stereo playback: 14 mW @ 1.8 V
  - Stereo record and playback: 23 mW @ 1.8 V
- 98 dB dynamic range (A-wtd) and -88 dB THD+N
- 24-bit conversion, up to 96 kHz sample rates
- 4:1 analog input MUX
- Analog input mixing and pass through
- Analog programmable gain amplifier (PGA) and automatic level control (ALC)
- Dual MIC inputs
- Digital signal processing engine
  - Bass and treble tone control, de-emphasis
  - Master volume control
  - Soft-ramp and zero-cross transitions
  - Programmable peak-detect and limiter
  - Beep generator with full tone control
- Package: 40-pin QFN, lead free assembly
- Consumer and automotive grade availability
- Low 384 k switching frequency

Applications

- Digital Cameras
- Digital Voice Recorders
- Handheld GPS
- MP3 Players
- PDAs & Smartphones
- Portable Gaming Systems
- Portable Media Players (MP4)
- Toys

The CS42L52 codec functions as the complete audio package for portable audio applications. Incorporating an efficient on board Class-D speaker driver, ground centered head phone amplifier and digital signal processing engine, the CS42L52 delivers excellent audio performance while providing portable device developers with an innovative all around solution.

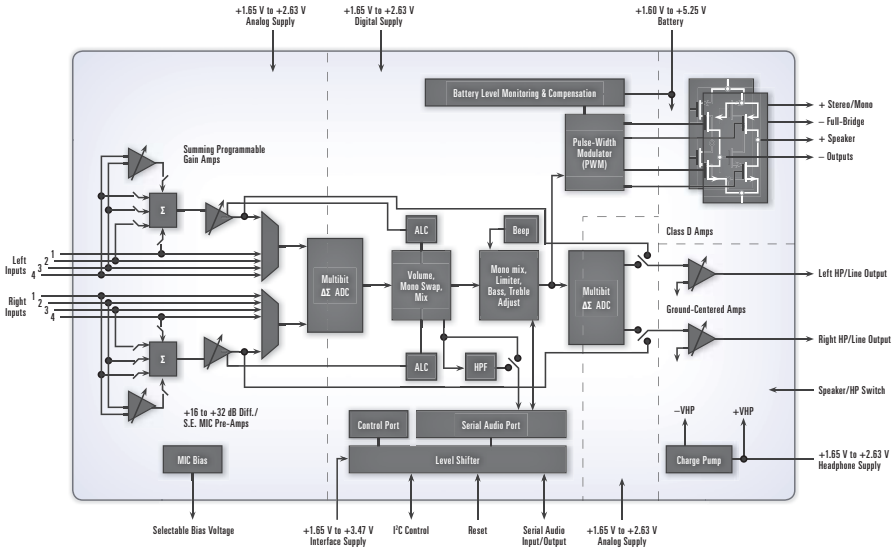

CS42L55

Ultra-low Power Stereo Codec with Class H Headphone Amplifier

Features

- Ultra-low power stereo audio codec
  - Stereo playback to headphone: 5.08 mW @ 1.8 V
  - Stereo record and playback: 8.23 mW @ 1.8 V
- Operates from a single 1.8 V or 2.5 V supply
- 24-bit conversion, up to 48 kHz sample rates
- 12 MHz USB master clock input
- Digital to analog features
  - 99 dB dynamic range (A-wtd) and -86 dB THD+N
  - Class H amplifier—automatic supply adjusting
    - High efficiency and low EMI
    - 2 x 20 mW power into 32 Ω @ 1.8 V
    - 2 x 20 mW power into 16 Ω @ 1.8 V
    - -75 dB THD+N
  - Pseudo-differential ground-centered outputs—no DC-blocking capacitors required
  - 1 V_{RMS} Line Output @ 1.8 V
  - Analog volume control (+12 to -55 dB in 1 dB steps)
  - Analog in to analog out passthrough
  - Pop and click suppression
- Analog to digital features
  - 95 dB dynamic range (A-wtd) and -87 dB THD+N
  - 2:1 stereo input multiplexer
  - Pseudo differential inputs
  - PGA, +12 dB to -6 dB in 0.5 dB steps
- Digital signal processing engine
  - Digital bass and treble tone control
  - Programmable peak signal detect and limiter
  - Digital volume control with soft ramp and zero cross
  - Beep generator with full tone control
- Power down management—chip/block selectable
- CS42L55, 36X-QFN, lead-free assembly

Applications

- Digital Voice Recorders
- Portable Audio Recording Systems
- Portable Gaming Systems
- Portable Media Players
- Portable Navigation Devices
- Wireless Headsets

The CS42L55 is a 24-bit, ultra-low power stereo codec that offers excellent audio performance, feature integration and battery life. The CS42L55 features an automatic, supply-adjusting bimodal Class H headphone amplifier that combines the efficiency of an integrated stepdown and inverting charge pump with the linearity and low EMI of a Class AB amplifier. The amplifier delivers a ground-centered output with a large signal swing even at low voltages and eliminates the need for external DC-blocking capacitors.

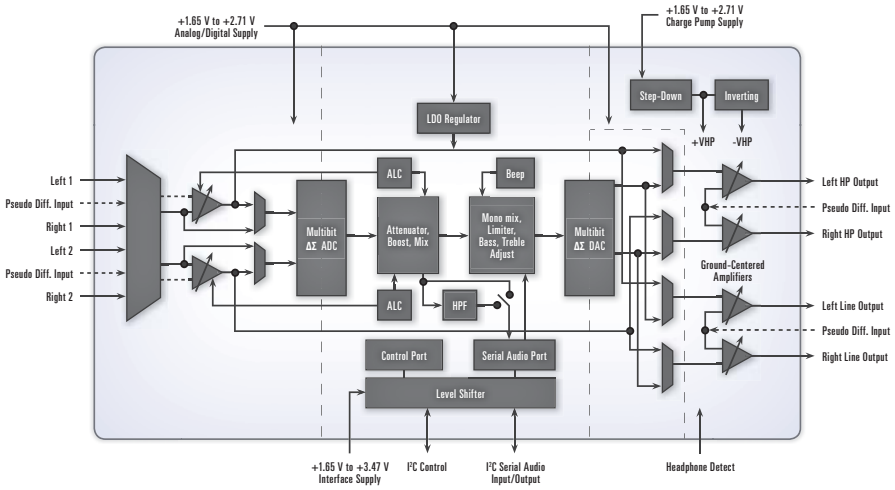

CS42L73

Highly Integrated Low Power Mobile Stereo Codec

Features

Analog I/O

- Stereo high performance ADC
  - 91 dB Dynamic Range (A-wtd)
  - -85 dB THD+N
- Dual digital microphone interface
- Independent MIC bias outputs
- Stereo DAC to headphone amplifier
  - 94 dB Dynamic Range (A-wtd)
  - -81 dB THD+N into 32 Ω
- Integrated Step-down/Inverting Charge Pump
- Class H amplifier - automatic supply adj.
  - High HP Power Output at -70/-81 dB THD+N
  - 2 x 17/8.5 mW into 16/32 Ω @ 1.8 V
- Stereo DAC to Line Outputs

Stereo High Performance Line Level DAC

- 97 dB Dynamic Range (A-wtd)
- -86 dB THD+N
- 1 V_{RMS} from a single 1.8 V power supply

Mono DAC to Ear Speaker Amplifier

- High Power Output at -70 dB (0.032%) THD+N
- -45 mW into 16 Ω @ 1.8 V

Mono DAC to Speakerphone Amplifier

- High output power at ≤ 1% THD+N
- -1.18/0.84/0.66 W into 8 Ω @ 5.0/4.2/3.7 V
- Direct battery-powered operation

Applications

- Smartphones
- Mobile Internet Devices
- Bluetooth Headsets

CS42L73 is a highly integrated, low-power, mobile audio distribution network that incorporates two stereo DACs and a stereo ADC with ground centered headphone, line and speaker amplifiers for smartphone and portable applications. Three asynchronous bidirectional serial ports with integrated asynchronous sample rate converters (ASRCs) that accept a wide range of incoming audio sample rates can be used to feed the integrated digital mixing engine, which is the heart of the CS42L73.

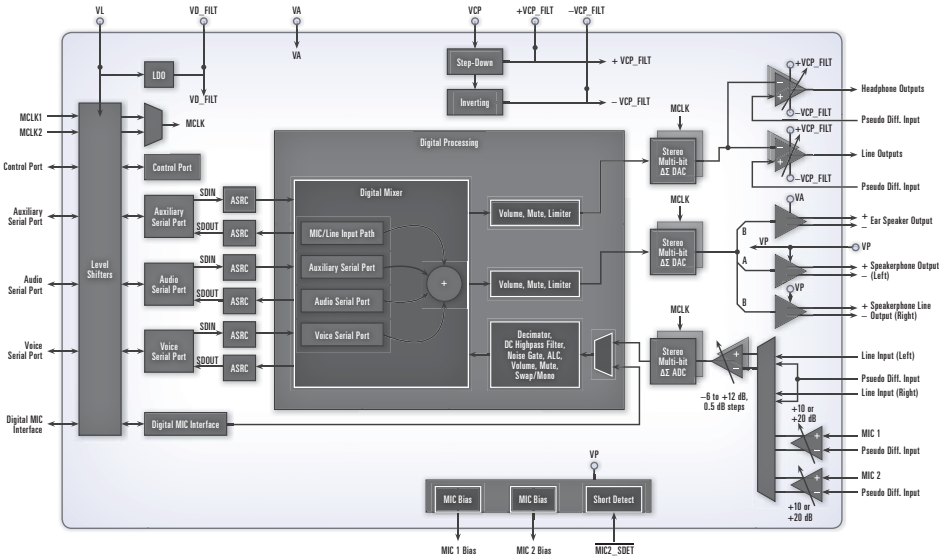

CS43L21

D/A Converter with Volume Control and Ground Centered Output

Features

- Stereo playback: 12.93 mW @ 1.8 V
- Operates from a single 1.8 V or 2.5 V supply
  - 1.8 V to 2.5 V digital & analog
  - 1.8 V to 3.3 V interface logic
- Power down management
- Software mode (I^2C/SPI control)
- Hardware mode (standalone control)
- Digital signal processing engine
  - Bass & treble tone control, de-emphasis
- On chip beep generator
- Master or slave operation
- High-impedance digital output option (for easy muxing between D/A converter and other data sources)
- Quarter-speed mode—(i.e. allows 8 kHz Fs while maintaining a flat noise floor up to
- Headphone Amplifier—GND Centered
  - On-Chip Charge Pump Provides – VA _ HP
  - No DC-Blocking Capacitor Required
  - 46 mW Power Into Stereo 10 Ω @ 1.8 V
  - 88 mW Power Into Stereo 16 Ω @ 2.5 V
  - -75 dB THD+N
- 98 dB Dynamic Range (A-wtd)
- -86 dB THD+N
- Lead-free assembly

Applications

- PDAs
- Portable Media Peripherals and Docking Stations
- Portable Media Players
- Portable Gaming
- Wireless Stereo Headphones
- Toys

The CS43L21 is a highly integrated, 24-bit, 96 kHz, low power stereo D/A converter with astounding audio performance for its size. An integrated charge pump, and headphone amplifier that outputs up to 88 mW of ground centered power into 16 Ω speakers, offers designers a flexible solution for their portable audio needs.

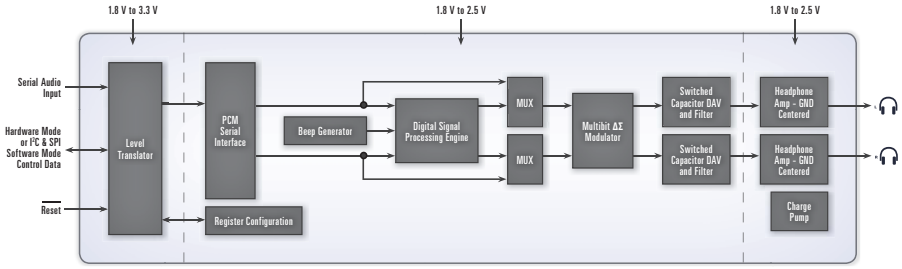

CS43L22

D/A Converter with 1 W per Channel PWM Speaker Amplifier

D/A Features

- 98 dB dynamic range (A-wtd)
- -88 dB THD+N
- 4 kHz to 96 kHz sample rates
- Digital signal processing engine
- Class D stereo/mono speaker amplifier
- No external filter required
- High stereo output power
- 2 x 1.00 W into 8 Ω @ 5.0 V
- 2 x 550 mW into 8 Ω @ 3.7 V
- Direct battery powered operation
- Low quiescent current
- Stereo headphone amplifier/line output
- Ground centered outputs w/integrated charge pump
- No DC-blocking capacitor required
- High power output at -75 dB THD+N
- 2 X 23 mW into 16 Ω @ 1.8 V

System Features

- Flexible clocking options
- 12, 24, and 27 MHz master clock support in addition to typical audio clock rates
- Low quiescent power operation
- Stereo analog passthrough: 10 mW @ 1.8 V
- Stereo playback: 14 mW @ 1.8 V
- Variable power supplies
- 1.8 V to 2.5 V digital & analog
- 2.5 V to 5 V class D amplifier
- 1.8 V to 2.5 V headphone amplifier
- 1.8 V to 3.3 V interface logic
- Chip block selectable power down management
- I²C control port operation
- Headphone/speaker detection input
- Pop and click suppression

Applications

- Handheld GPS
- IP Set-Top Boxes
- MP3 Docking Stations
- MP3 Players
- Portable DVD Player
- Portable Gaming Devices
- Portable Media Players
- Toys

The CS43L22 is a high performance 24-bit Stereo DAC with a PWM speaker amplifier capable of driving 1 W per channel. The CS43L22 also features a ground centered headphone/line output, digital signal processing engine, and very low power consumption, all packaged in a vanishingly thin 40-pin QFN.

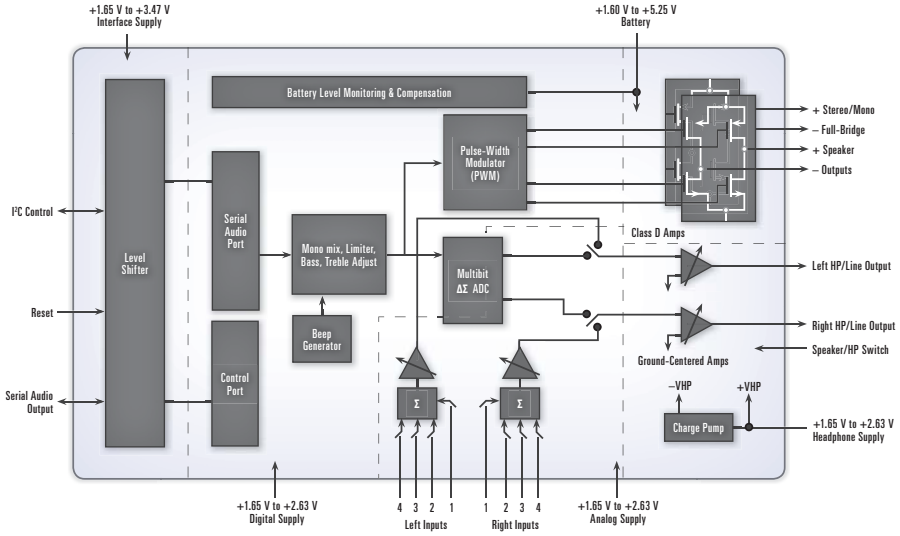

CS53L21

Low-Power Stereo Analog-to-Digital Converter

Features

- Low-power audio A/D converter
- Stereo record (A/D converter): 8.72 mW @ 1.8 V
- Stereo record (MIC to PGA and A/D converter): 13.73 mW @ 1.8 V
- Operates from a single 1.8 V or 2.5 V supply
- Supports direct interface to logic levels from 1.8 V to 3.3 V
- 3:1 stereo input selector
- Analog gain controls
  - PGA, +12 dB to -3 dB in 0.5 dB steps
  - +32 dB or +16 dB stereo MIC pre-amp with bias supply
- Programmable automatic level control
  - Noise gate for noise suppression
  - Programmable threshold and attack/release rates
- Independent left/right channel control
- Digital volume control with soft ramp and zero cross
- High-pass filter disable for DC measurements
- Master or slave mode operation
- Hardware or software control
- 98 dB dynamic range
- -88 dB THD+N
- 24-bit conversion, up to 96 kHz sample rates
- Flexible power-down management—chip/block selectable
- Package: 32 QFN, lead-free assembly

Applications

- Audio/Video Capture Cards
- Digital Microphones
- Digital Voice Recorders
- Portable Audio Players
- Voice Recognition Systems

The CS53L21 is a highly integrated, 24-bit, 96 kHz, low-power stereo A/D. Based on multibit, Delta-Sigma modulation, it allows infinite sample rate adjustment between 4 kHz and 96 kHz.

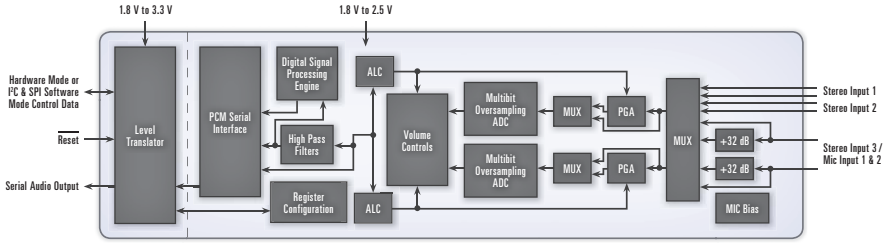

Specifications

Low Power Class-D Audio Amplifiers

Part	Power (W)	Dynamic Range (dB)	THD+N %	PSRR (dB)	Channels	Power Supply (V)	Gain	Comments	Package
CS35L00	3.0	98	0.02	-85	1	2.5 to 5.5	Selectable +6/+12dB	Hybrid Class-D architecture < 1 mA quiescent current	10 DFN
CS35L01	3.0	98	0.02	-85	1	2.5 to 5.5	+6dB	Hybrid Class-D architecture < 1 mA quiescent current	9 WLCSP
CS35L03	3.0	98	0.02	-85	1	2.5 to 5.5	+12dB	Hybrid Class-D architecture < 1 mA quiescent current	9 WLCSP

Specifications

Integrated Class-D Audio Amplifier

Part	Power (W)	Dynamic Range (dB)	THD+N %	Channels	Power Supply (V)	Comments	Package
CS4525	2x15	102	0.1	2.1	VP = 8 to 18 VD = 2.5 to 5	Integrated digital audio amp w/ ADC, SRC and signal processor	48 QFN

CS35L00/01/03

A/D Converter for Class-D Real-Time PSR Feedback

Features

- Hybrid Class-D Architecture
  - 1 x 3.0 W into 4 Ω (10% THD+N)
  - 1 x 2.3 W into 4 Ω (1% THD+N)
  - 1 x 1.7 W into 8 Ω (10% THD+N)
  - 1 x 1.4 W into 8 Ω (1% THD+N)
- Ultra-low Power Consumption
  - < 1 mA Quiescent Current
- Advanced ΔΣ Closed-loop Modulation
  - 97 dB Signal-to-Noise Ratio (A-Weighted)
  - 0.02% THD+N @ 1 W (SD & HD Mode)
  - -85 dB Power Supply Rejection Ratio @ 217Hz
  - -70 dB Common Mode Rejection Ratio
- Integrated Protection and Automatic Recovery for Output Short-circuit and Thermal Overload
- Pop and Click Suppression
- Available in Low-profile 10-pin DFN or 9-ball WLCSP
  - CS35L00: +6 dB or +12dB Selectable Gain
  - CS35L01: +6 dB default Gain
  - CS35L03: +12 dB default Gain

Applications

- Smartphones
- UMPC/MID
- Docking Stations
- Active Speakers
- Portable Gaming

The CS35L00/01/03 are 2.9 W high efficiency Hybrid Class-D audio amplifiers with ultra low idle current consumption at < 1 mA. The family features an advanced closed-loop architecture to provide 0.02% THD+N at 1 W and -85 dB PSRR at 217 Hz.

A flexible Hybrid Class-D output stage offers four modes of operation: Standard Class-D (SD) mode offers full audio bandwidth and high audio performance; Hybrid Class-D (HD) mode offers a substantial reduction in idle power consumption with an integrated Class-H controller; Reduced Frequency Class-D (FSD) mode reduces the output switching frequency, producing lower electromagnetic interference (EMI); and Reduced Frequency Hybrid Class-D (FHD) mode produces both the lower idle power consumption of HD mode and the reduced EMI benefits of FSD mode.

Requiring minimal external components and PCB space, the CS35L00 is available in 3 mm x 3 mm, 10-pin DFN package and the CS35L01/03 are available in a 1.2 mm x 1.2 mm, 9-ball WLCSP package with Commercial temperature grade (-10ºC to +70ºC).

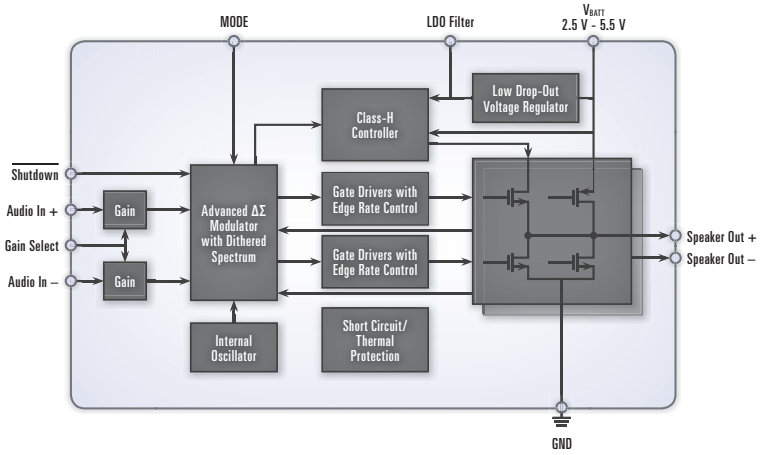

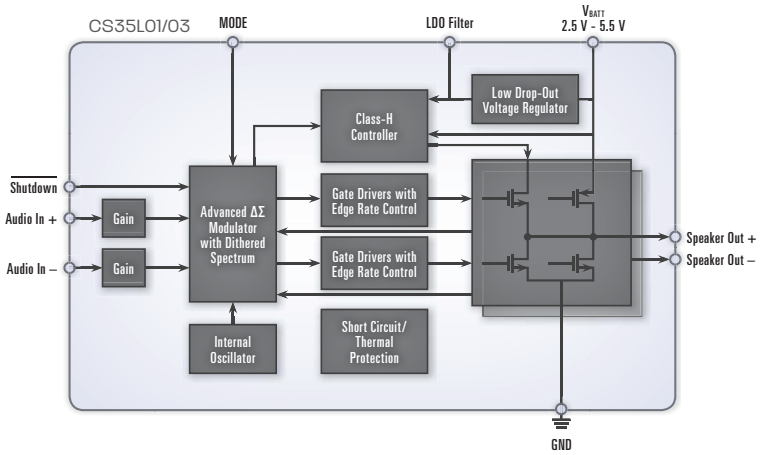

CS4525

30 W Integrated Digital Amplifier with On-chip Stereo A/D Converter

Features

- Fully integrated power amplifier
- Stereo A/D converter
  - Sample-rate converter
  - Digital audio processor
  - PWM controller
  - Power MOSFETs
- High efficiency
- No heatsink required
  - Programmable power foldback on thermal warning
- > 100 dB dynamic range
- < 0.1% THD+N @ 1 W
- Configurable outputs (10% THD+N)
  - 1 x 30 W into 4 Ω, parallel full-bridge
  - 2 x 15 W into 8 Ω, full-bridge
  - 2 x 7 W into 4 Ω, half-bridge + 1 x 15 W into 8 Ω, full-bridge
- PWM Popguard technology for half-bridge mode
- Built-in protection with error reporting
  - Overcurrent/undervoltage/thermal overload shutdown
  - Thermal warning reporting
- Programmable channel delay and spread spectrum PWM modulation for system noise and radiated emissions management
- On-chip stereo A/D converter
  - 24-bit, 48 kHz conversion
  - 95 dB dynamic range
  - -88 dB THD+N
  - 2 V_{RMS} input supports SCART
- Thermally enhanced QFN package, lead-free assembly

Applications

- Desktop Speakers
- Digital TVs
- MP3 Docking Stations
- Micro/Mini Shelf Systems
- Video Gaming Systems

The CS4525 is a stereo analog or digital input PWM high efficiency Class-D amplifier audio system with an integrated stereo analog-to-digital (A/D) converter. The stereo power amplifiers can deliver up to 15 W per channel into 8 Ω speakers from a small space saving 48-pin QFN package. The PWM amplifier can achieve greater than 85% efficiency and the package is thermally enhanced for optimal heat dissipation, which eliminates the need for a heatsink.

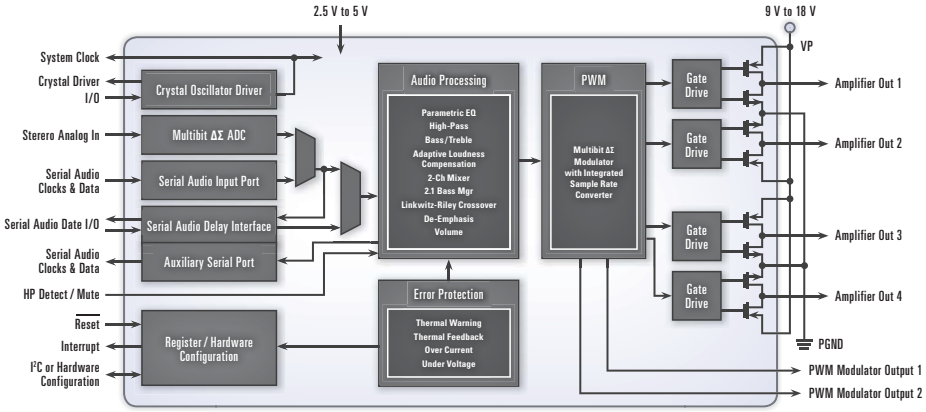

Specifications

Interfaces & Sample-Rate Converters

Part	Sample Rate (kHz)	S/PDIF, IEC-60958 Transmitter	S/PDIF, IEC-60958 Receiver	AES/EBU	EIAJ CP1201	Host Interface	Channel Status Buffer Memory	SRC	Package
CS8406	192	✓	—	✓	✓	✓	✓	—	28 SOIC 28 TSSOP
CS8416	192	—	✓	✓	✓	✓	✓	—	28 SOIC 28 TSSOP 28 QFN
CS8420	96	✓	✓	✓	✓	✓	✓	✓	28 SOIC
CS8421	192	—	—	—	—	—	—	✓	20 TSSOP 20 QFN
CS8422	192	—	✓	✓	✓	✓	✓	✓	32 QFN
CS8427	96	✓	✓	✓	✓	✓	✓	—	28 SOIC 28 TSSOP

CS8406

192 kHz Digital Audio Transmitter

Features

- Compatible with EIAJ CP1201, IEC-60958 and AES3 standards
- On-chip channel status user bit buffer memories allow block-sized updates
- Flexible 3-wire, serial digital audio input port
- Up to 192 kHz frame rate
- Microcontroller write access to channel status and user bit data
- On-chip differential line driver
- Generates CRC (cyclical redundancy check) codes and parity bits
- Standalone mode allows use without a microcontroller
- 3.3 V or 5 V digital interface supply (VL)
- 3.3 V or 5 V digital supply (VD)
- Pin compatible with CS8405A
- Package: 28-pin SOIC, 28-pin TSSOP, lead-free assembly
- Consumer and automotive D-grade availability

Applications

- Automotive Entertainment Systems
- Blu-ray/DVD Players/ Recorders
- Digital Audio/Video Receivers
- Digital Mixing Consoles
- Digital Video Recorders (PVRs)
- Effects Processors

The CS8406 is a digital audio transmitter that supports 192 kHz and is fully compatible with EIAJ CP1201, IEC-60958 and AES3 standards. It enables consumer and professional audio products to exchange 192 kHz S/PDIF and AES/EBU audio data. The CS8406 accepts and encodes audio and digital data, which is then multiplexed, encoded and driven onto a cable/optical transmission interface.

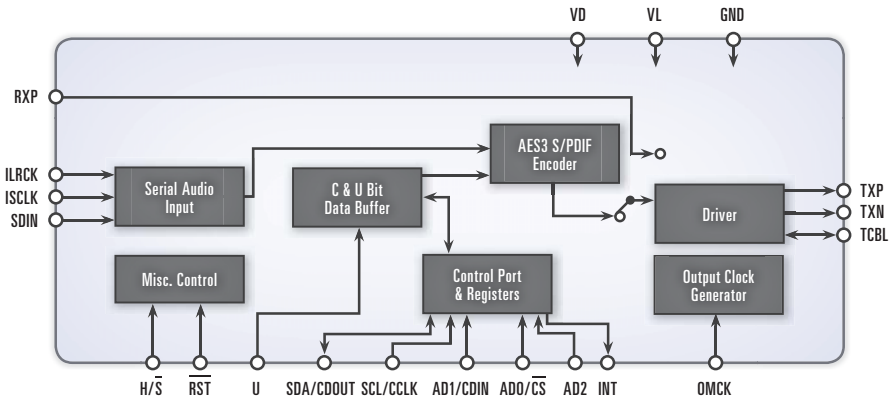

CS8416

192 kHz Digital Audio Receiver

Features

- Compatible with EIAJ CP1201, IEC-60958 and AES3 standards
- 8:2 S/PDIF input MUX; selectable pins in hardware mode
- Selectable signal routing to three general-purpose output pins
- S/PDIF to Tx inputs selectable in hardware mode
- Flexible 3-wire serial digital output port
- 32 kHz to 192 kHz sample frequency range
- Low-jitter clock-recovery
- Pin and microcontroller read access to channel status and user data
- SPI (serial port interface) or I²C Control Port software mode and standalone hardware mode
- Differential cable receiver
- On-chip channel status data buffer memories
- Autodetection of compressed audio input streams
- Decodes CD Q subcode
- OMCK system clock mode
- 3.3 V analog supply (VA), 3.3 V digital supply (VD) and 3.3 V to 5 V digital interface supply (VL)
- Package: 28-pin SOIC, 28-pin TSSOP, 28-pin QFN, lead-free assembly
- Consumer and automotive D-grade availability

Applications

- A/V Receivers
- Automotive Entertainment Systems
- Blu-ray/DVD Receivers
- Digital Mixing Consoles
- Multimedia Speakers
- Set-Top Boxes

The CS8416 is an ultra-low jitter digital audio receiver that features an 8:2 input MUX. Receiving and decoding audio data with sample rates up to 192 kHz, it enables consumer and professional audio products to exchange S/PDIF and AES/EBU audio data.

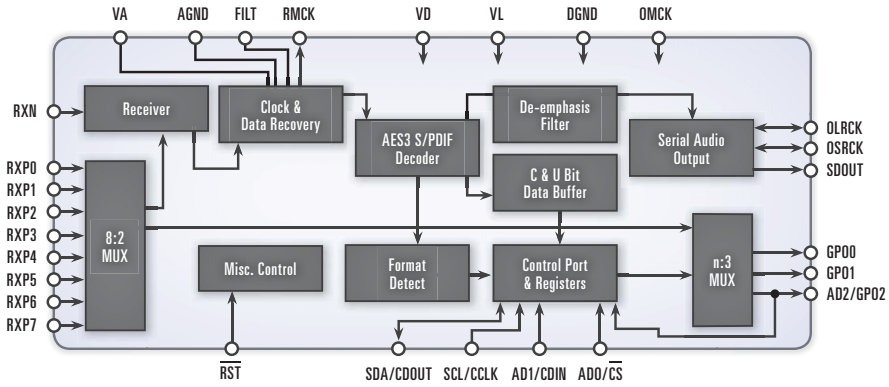

CS8420

24-bit, 96 kHz Sample-Rate Converter and Transceiver

Features

- Complete IEC-60958, AES3, S/PDIF and EIAJ CP1201 transceiver with asynchronous sample-rate converter; compatible with standards
- Flexible 3-wire serial digital I/O ports
- 8 kHz to 108 kHz sample-rate range
- 1:3 and 3:1 maximum input to output sample-rate ratio
- 128 dB dynamic range
- -117 dB THD+N at 1 kHz
- Excellent performance at almost a 1:1 ratio
- Excellent clock-jitter rejection
- 24-bit I/O words
- Pin and microcontroller read/write access to channel status and user data
- Microcontroller and standalone mode
- Package: 28-pin SOIC, lead-free assembly
- Consumer and automotive D-grade availability

Applications

- CD-R
- Computer Audio Systems
- DAT (Digital Audio Tape)
- DVD and Video Tape Recorder (VTR) Equipment
- Digital Audio Transmission Equipment
- Effects Processors
- High-Quality D/A and A/D Converters
- Minidisc
- Mixing Consoles

The CS8420 is a stereo, digital audio sample-rate converter with AES3 type and serial digital audio inputs and AES3 type and serial digital audio outputs, along with comprehensive control via a 4-wire microcontroller port. Channel status and user data can be assembled in block-sized buffers, making read/modify/write cycles easy.

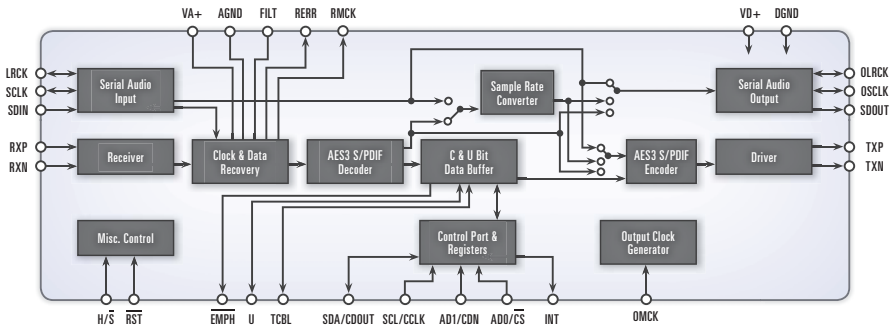

CS8421

32-bit, 192 kHz, Asynchronous Stereo Sample-Rate Converter

Features

- High-performance, asynchronous sample-rate converter
- 16-, 20-, 24-, 32-bit support
- Supports sample rates 8 kHz to 192 kHz
- Input/Output ratios from 7.75:1 to 1:8
- 175 dB dynamic range
- -140 dB THD+N
- H/W mode—no programming required
- Low group delay
- Bypass mode
- TDM mode with matched phase for daisy chaining
- On-chip crystal oscillator
- Flexible 3-wire serial digital audio input port
- +2.5 V digital power supply (VD)
- +3.3 V or 5 V interface power supply (VL)
- Space-saving 20-pin QFN or TSSOP package, lead-free assembly
- Consumer and automotive D-grade availability

Applications

- Automotive Entertainment Systems
- Computer Sound Cards and Pro Audio Equipment Such as Digital Mixing Consoles
- Consumer Electronics Devices
- Effects Processors
- Multitrack Digital Recorders

The CS8421 is a 32-bit, 192 kHz, asynchronous, stereo sample-rate converter. Digital audio inputs and outputs can be 32-, 24-, 20- or 16-bits. Input and output data can be completely asynchronous, synchronous to an external data clock or the part can operate without any external clock by using an integrated oscillator.

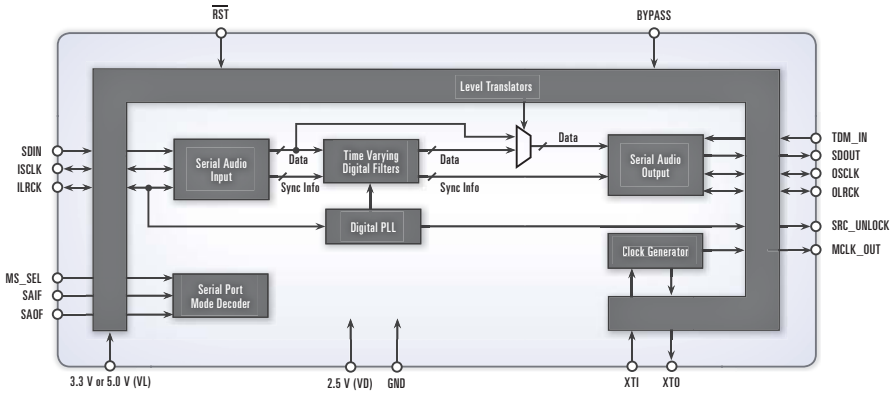

CS8422

192 kHz S/PDIF Receiver with Sample-Rate Converter

Features

- Complete EIAJ CP1201, IEC-60958, AES3, S/PDIF compatible receiver
- Receiver supports 28 kHz to 216 kHz sample-rate range
- SRC supports sample rates up to 211 kHz
- Sample-rate ratios from 6:1 to 1:6
- 16, 18, 20, or 24-bit data I/O
- 140 dB dynamic range
- -120 dB THD+N
- 4:1 S/PDIF or 2:1 differential AES3 inputs
- High input jitter tolerance and ultra-low jitter clock recovery
- No external PLL filter components required
- AES3 direct output and AES3 Tx pass-through
- No external master clock required
- SPI or I^{2}C software mode and standalone hardware mode
- Flexible 3-wire digital serial audio input port and dual serial audio output ports
- Four general-purpose output pins
- Time division multiplexing (TDM) mode
- 1.8 V to 5.0 V digital interface
- Space-saving 32-pin QFN package

Applications

- A/V Receivers
- Automotive Entertainment Systems
- Blu-ray Disc Receivers
- Effects Processors
- Set-Top Boxes
- Mixing Consoles

The CS8422 is a digital audio interface receiver with a 24-bit, high performance, asynchronous sample-rate converter. This integrated feature set removes the requirement for system platforms to vary system clocking when integrating asynchronous digital interfaces such as S/PDIF. System integrators can now maintain a constant-frequency, high-quality system clock and provide a digital interface to external devices operating at various asynchronous samples rates from 32 kHz to 211 kHz.

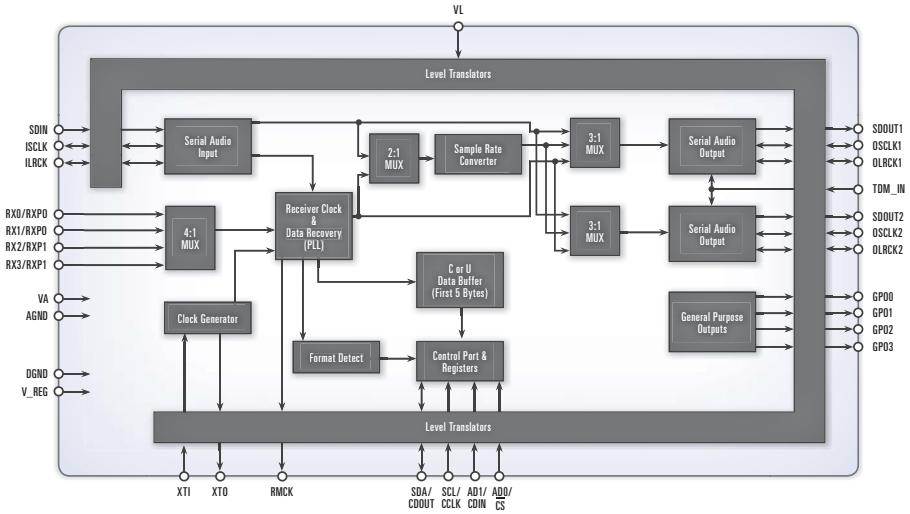

CS8427

96 kHz Digital Audio Transceiver

Features

- Complete EIAJ CP1201, IEC-60958, AES3 and S/PDIF transceiver; compatible with standards
- Flexible 3-wire serial digital I/O ports
- Adjustable sample rate up to 96 kHz
- Low-jitter clock-recovery
- Pin and microcontroller read/write access to channel status and user data
- Microcontroller and standalone modes
- Differential cable driver and receiver
- On-chip channel status and user data buffer memories permit block reads and writes
- OMCK system clock mode
- Decodes audio CD Q subcode
- 5 V analog supply (VA)
- 3 V to 5 V digital supply (VL)
- Package: 28-pin SOIC, 28-pin TSSOP, lead-free assembly

Applications

- A/V Receivers
- Automotive Entertainment Systems
- Blu-ray/DVD Receivers
- Computers
- CD-R
- Digital Mixing Consoles
- Effects Processors
- Multimedia Speakers
- Set-Top Boxes

The CS8427 is a stereo, digital audio transceiver with AES3 and serial digital audio inputs and outputs, along with comprehensive control through a 4-wire microcontroller port. Channel status and user data are assembled in block-sized buffers, making read/modify/write cycles easy.

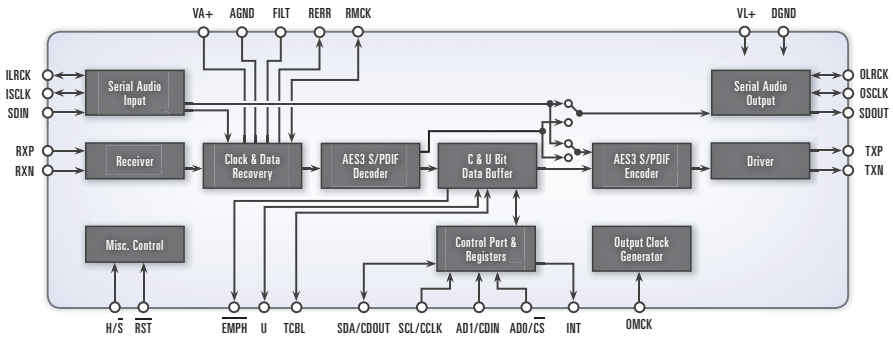

Clock Generation and Multiplication Timing Solutions

Host Interface	One-Time Programmable	Frequency Synth/Clock Generator	Clock Multiplier/ Jitter Remover	Power Supply (V)	Input Frequency Range (Hz)	Reference Frequency Range	Output Frequency Range	Package
CS2000-CP	CS2000-OTP	✓	✓	3.3	50 Hz to 30 MHz	8 to 75 MHz	6 to 75 MHz	10 MSOP
CS2100-CP	CS2100-OTP	—	✓	3.3	50 Hz to 30 MHz	8 to 75 MHz	6 to 75 MHz	10 MSOP
CS2200-CP	CS2200-OTP	✓	—	3.3	—	8 to 75 MHz	6 to 75 MHz	10 MSOP
CS2300-CP	CS2300-OTP	—	✓	3.3	50 Hz to 30 MHz	Internally Generated	6 to 75 MHz	10 MSOP

CS2xxx Family

Clock Generation and Multiplication Timing Solutions

Features

- High-performance analog/digital phase locked loop
- Clock multiplier/jitter reduction
  - Generates a low-jitter 6-75 MHz output clock from a jittery or intermittent 50 Hz to 30 MHz clock source
- Clock generation/frequency synthesis
  - Generates a low-jitter 6-75 MHz clock relative to 8-75 MHz reference clock
- Highly accurate PLL multiplication factor
  - Less than 1 PPM error
- Flexible control options
  - One-time-programmable configuration for hardware mode
  - I^2C/SPI control port
- Configurable auxiliary output
  - Buffered reference clock
  - PLL Lock indication
  - Second PLL output
  - Buffered version of CLK _ IN
- Flexible sourcing of reference clock
  - External oscillator or clock source
  - Supports inexpensive local crystal
- Minimal board space required
  - NO external analog loop-filter components required
  - Packaged in a 10-pin MSOP
- CS2300 has internal LCO for reference clock
- CS2200 is a subset and consists of clock generation
- CS2100 is a subset and consists of clock multiplication

Applications

- A/V Receivers
- Camcorders
- Digital Effects Processors
- Digital Mixing Consoles
- Outboard ADC and DAC Converters
- Satellite Radio Systems

Precise clocking solutions are essential in electronics applications because they are used to synchronize the components used in professional and consumer audio equipment and directly affect audio quality. The CS2000 is unique because it offers both a clock generator feature and clock cleanup in a single IC. The IC's ability to significantly reduce jitter, or noise, make it ideal for the pro audio as well as mainstream consumer audio/video application.

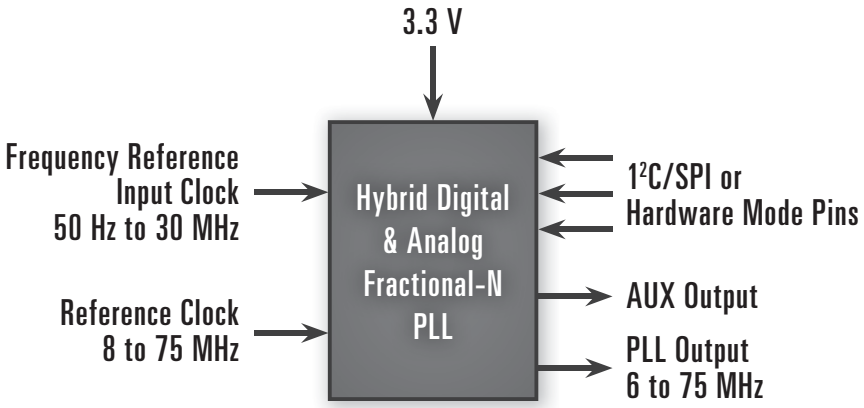

Volume Control

Part	Channel	Dynamic Range (dB)	THD+N (dB)	Analog I/O	Power Supply (V)	Comments	Package
CS3308	8	123	-112	Single-ended	VA = ±5 VD = 3.3	+22 dB gain/-96 dB attenuation, 0.25 dB step	48 LQFP
CS3310	2	116	-100	Single-ended	VA = ±5 VD = 5	+31.5 dB gain/-95.5 dB attenuation, 0.5 dB step	16 SOIC
CS3318	8	127	-112	Single-ended	VA = ±8 to ±9 VD = 3.3	+22 dB gain/-96 dB attenuation, 0.25 dB step	48 LQFP

CS3308

123 dB, 8-channel Analog Volume Control

Features

- Complete analog volume control
  - 8 independently controllable channels
  - 3 configurable master volume and muting controls
- Wide adjustable volume range
  - -96 dB to +22 dB in 1/4 dB Steps
- Low distortion and noise
  - 123 dB dynamic range
  - -112 dB THD+N
- Noise-free level transitions
  - Zero crossing detection with programmable time out
- Low channel-to-channel crosstalk
  - 120 dB inter-channel isolation
- Comprehensive serial control port
  - Supports I²C/SPI communication
  - Independent control of up to 128 devices on a shared 2-wire I²C or 3-wire SPI control bus
  - Supports individual and grouped control of all CS3308 devices on the I²C/SPI control bus
- Standard power supply voltages
  - ±5 V analog supply
  - +3.3 V digital supply
- Lead-free assembly

Applications

- A/V Receivers
- DSP Amplifiers
- Digital Mixing Consoles
- External Audio Interfaces
- Home Theater Systems
- In-Car Entertainment Systems
- Outboard Audio Converters
- PC Soundcards

The CS3308 is an 8-channel digitally controlled analog volume control designed specifically for high-end audio systems. It features a comprehensive I²C/SPI serial control port for easy device and volume configuration of eight independent, low-distortion audio channels.

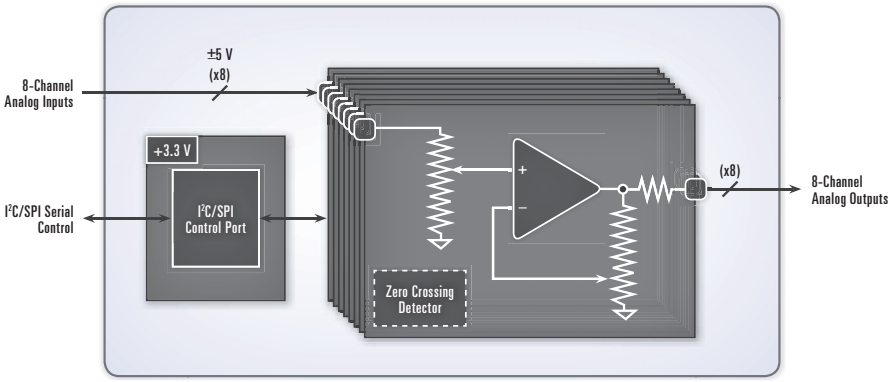

CS3310

Stereo Analog Volume Control

Features

- Complete digital volume control
  - Two independent channels
  - Serial control
  - 0.5 dB step size
- Wide adjustable range
  - -95.5 dB attenuation
  - +31.5 dB gain
- Low distortion and noise
  - -100 THD+N
  - 116 dB dynamic range
- Noise-free level transitions
- Channel-to-channel crosstalk better than 110 dB
- Package: 16-pin plastic SOIC, lead-free assembly

Applications

- A/V Receivers
- DSP Amplifiers
- Digital Mixing Consoles
- External Audio Interfaces
- Home Theater Systems
- In-Car Entertainment Systems
- Outboard Audio Converters
- PC Soundcards

The CS3310 is a complete stereo digital volume control designed specifically for audio systems. It features a 16-bit serial interface that controls two independent, low-distortion audio channels.

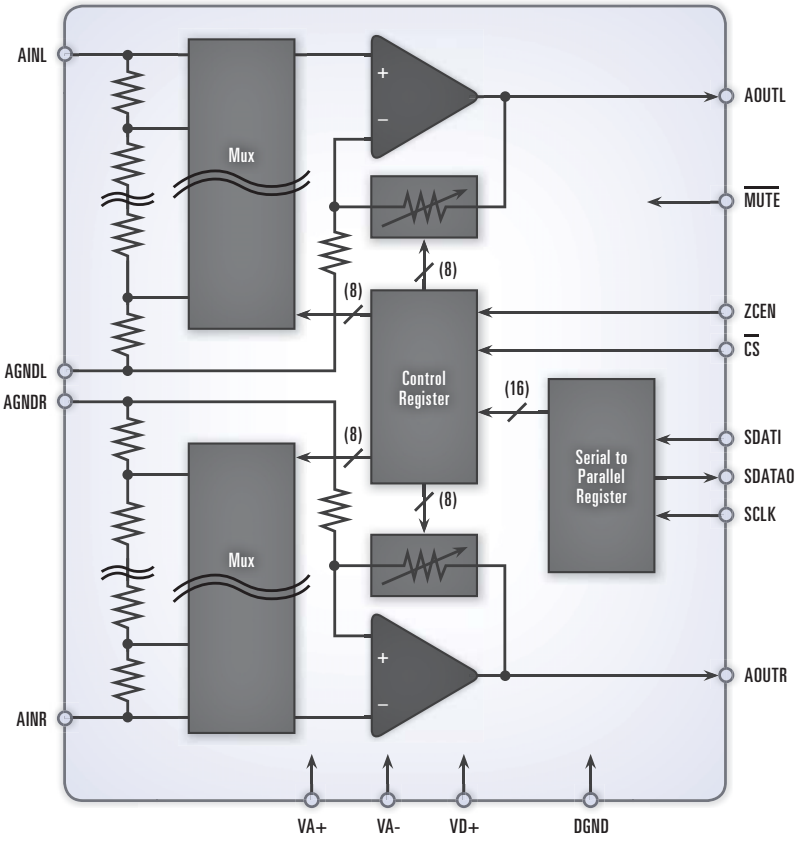

CS3318

High-Performance 8-Channel Analog Volume Control

Features

- Complete analog volume control
  - 8 independently controllable channels
  - 3 configurable master volume and muting controls
- Wide adjustable volume range
  - -96 dB to +22 dB in 1/4 dB steps
- Low distortion and noise
  - 127 dB dynamic range (CS3318)
  - -112 dB THD+N
- Noise-free level transitions
  - Zero-crossing detection with programmable time out
- Low channel-to-channel crosstalk
  - 120 dB inter-channel isolation
- Comprehensive serial control port
  - Supports I²C/SPI communication
  - Independent control of up to 128 devices on a shared 2-Wire I²C or 3-wire SPI control bus
  - Supports individual and grouped control of all CS3308/18 devices on the I²C or SPI control bus
- Standard power supply voltages
  - ±8 V and ±9 V analog supply (CS3318)
  - +3.3 V digital supply
- Lead-free assembly

Applications

- A/V Receivers
- DSP Amplifiers
- Digital Mixing Consoles
- External Audio Interfaces
- Home Theater Systems
- In-Car Entertainment Systems
- Outboard Audio Converters
- PC Soundcards

The flagship CS3318 is an 8-channel, high-voltage, digitally controlled analog volume control IC that is the benchmark for audio quality, showcasing 127 dB dynamic range. The CS3318 operates from a ±9 V power supply, with 118 dB adjustable range from +22 dB to - 96 dB, negligible distortion and inter-channel isolation. Plus, a 0.25 dB step size with zero-crossing detection and programmable time out ensures remarkably smooth control of volume adjustment.

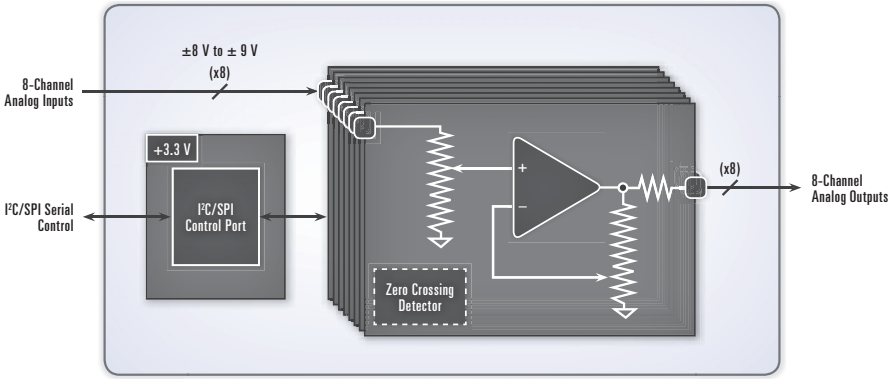

Notes

1

Cirrus Logic Inc.
T +1 512-851-4000
Toll Free +1 800-888-5016

Sales Support
North America +1 866-630-1158
Asia Pacific +852-2376-0801
Japan +81 (3) 6732-8477
Europe/UK +44 (0) 1628-891-300

www.cirrus.com

CIRRUS LOGIC®